Process Control, 3P4

Assignment 6

Kevin Dunn, kevin.dunn@mcmaster.ca **Due date: 28 March 2014**

This assignment gives you practice with cascade control and feedforward control.

Question 1 [10 = 6 + 4]

The outlet temperature from the tank is being controlled in a cascade control system, as shown below.

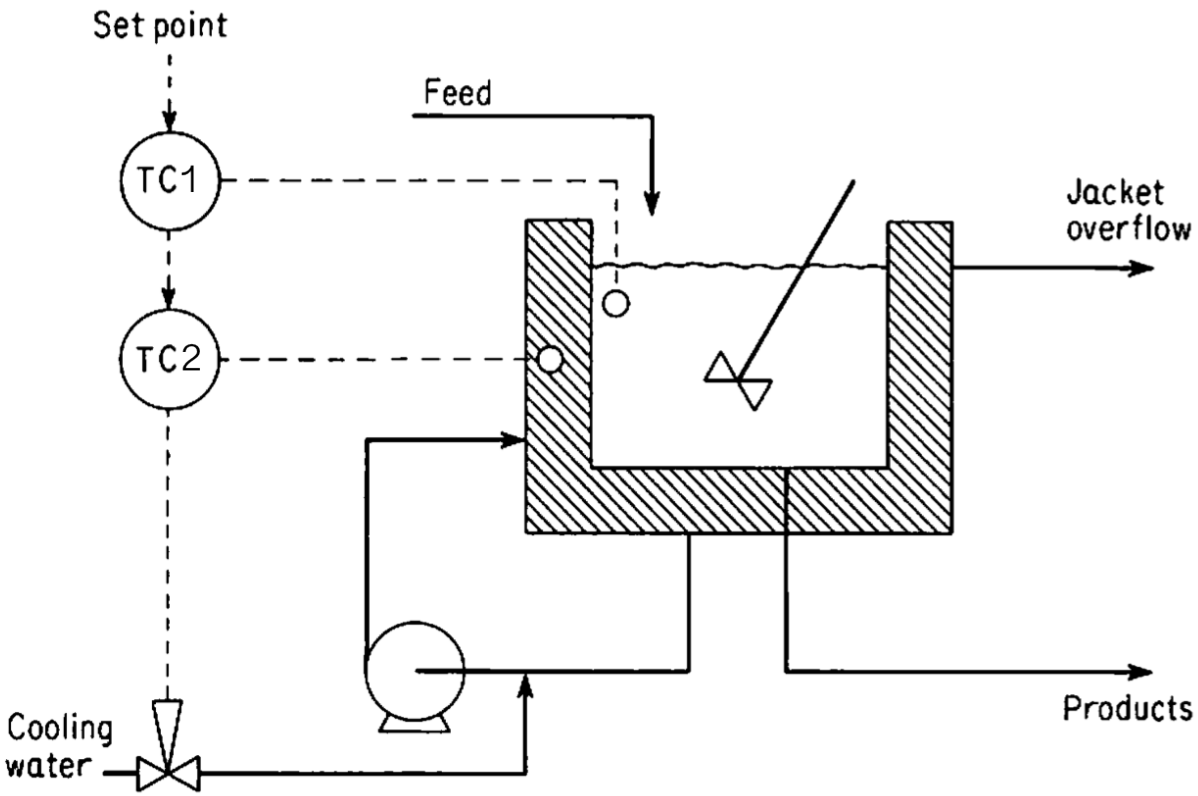

1. What is the primary variable in the cascade loop?
2. What is the secondary variable in the cascade loop?
3. What is the manipulated variable in the inner loop?
4. Explain whether a disturbance in the cooling water feed temperature will be removed rapidly with the cascade loop?
5. Explain whether a disturbance in the cooling water feed pressure will be removed rapidly with the cascade loop?
6. Explain whether a disturbance in the main feed temperature will be removed rapidly with the cascade loop?
7. Draw a complete block diagram of the system indicating all the inner and outer level controllers, process blocks and disturbance blocks.

Question 2 [12 = 3 + 9]

Consider the cascade system shown in the figure below:

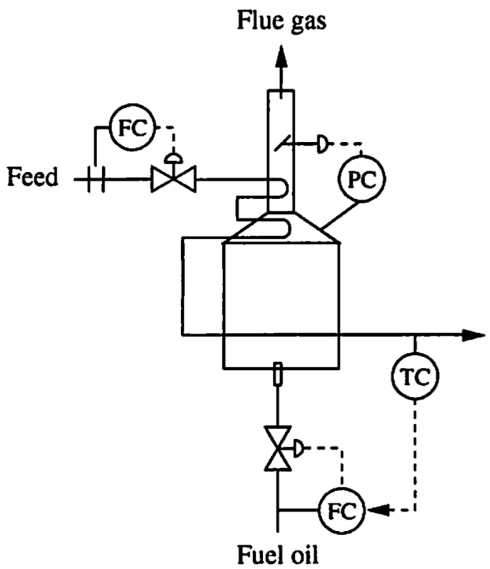

1. Show that the cascade loop, as drawn, is appropriate. (Don't simply write "Y" or "N" next to the criteria; explain your answers). You may assume the first criterion is met, i.e. the performance without cascade control is not suitable.
2. Determine, use clear, logical reasoning, and all your prior engineering knowledge of heat transfer and fluid flow whether the cascade loop would provide performance that is "better", "worse" or "no different" to direct control of `TC` using the valve position.
   (a) the disturbance is change in the composition of the fuel (i.e. the heating value changes)
   (b) the feed temperature increases
   (c) the pressure of the fuel decreases

Question 3 [10]

A block diagram for a cascade loop is shown below.

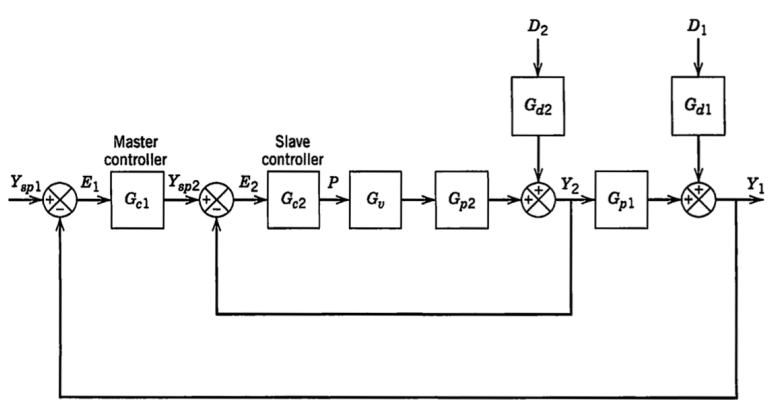

1. Derive a single transfer function from input Y_{sp2} to output Y_2, assuming $D_2 = 0$.

2. Redraw the block diagram, replacing it now with your single block transfer function at the suitable place, but still incorporate the disturbance effect from $D2$.
3. What is the characteristic equation for the inner loop?
4. If the inner loop has proportional-only controller for G_{c2}, and $G_v = 3$, and $G_{p2}(s) = \dfrac{6}{2s+1}$, derive a constraint (inequality) for the value of K_c so that the inner loop still has stable behaviour.
5. Explain whether this answer matches what we have learned earlier in the course?

Question 4 [20 = 2 + 10 + 5 + 2 + 1]

From a previous final exam

The question considers a tank that is electrically heated. The goal is to maintain the temperature `T6` as steady as possible.

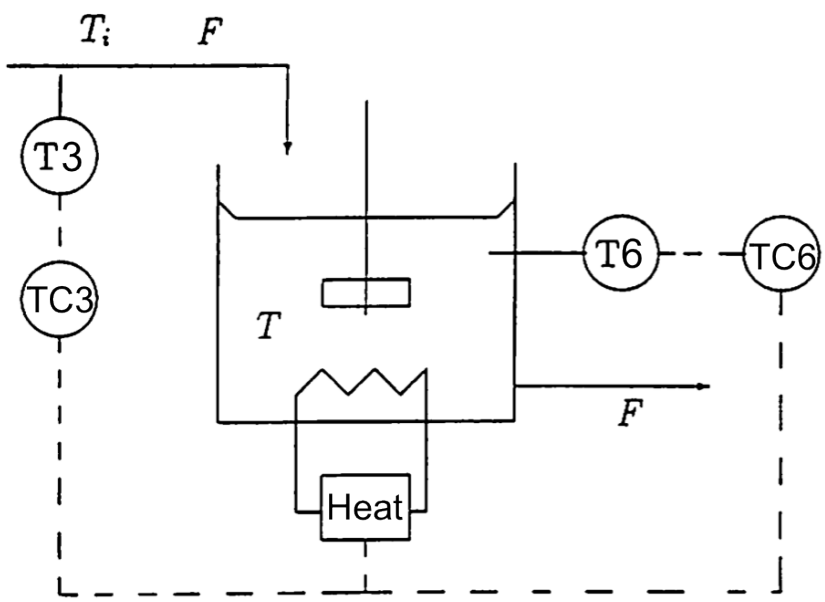

We know that

- F is constant
- A 4 to 20 mA change in input to the heater causes a change in power output from 0 to 1600 kW.
- The span of the transmitter is 64°C, with corresponding outputs of 4 to 20 mA.
- If the energy input is suddenly increased by 320 kW, it results in an eventual rise of 8°C in the tank, stabilizing after 500 seconds.
- A step change in the inlet temperature, T_i also gives rise to a complete response in about 500 seconds.

1. Which controller is the feedback controller, and which is the feedforward controller?
2. Draw a block diagram for the system, adding all elements, variables and their units to the diagram.
3. Design the feedforward controller.
4. No calculations are required: is the feedback control loop stable?
5. What is the purpose of having feedback control, in addition to feedforward control?

END