High Efficiency Power Production from Coal with Carbon Capture

Chemical Engineering 4N04

Boye Olaoye
JT Koeman
Rodas Fisseha
Muhammad Mohamad

Process Overview

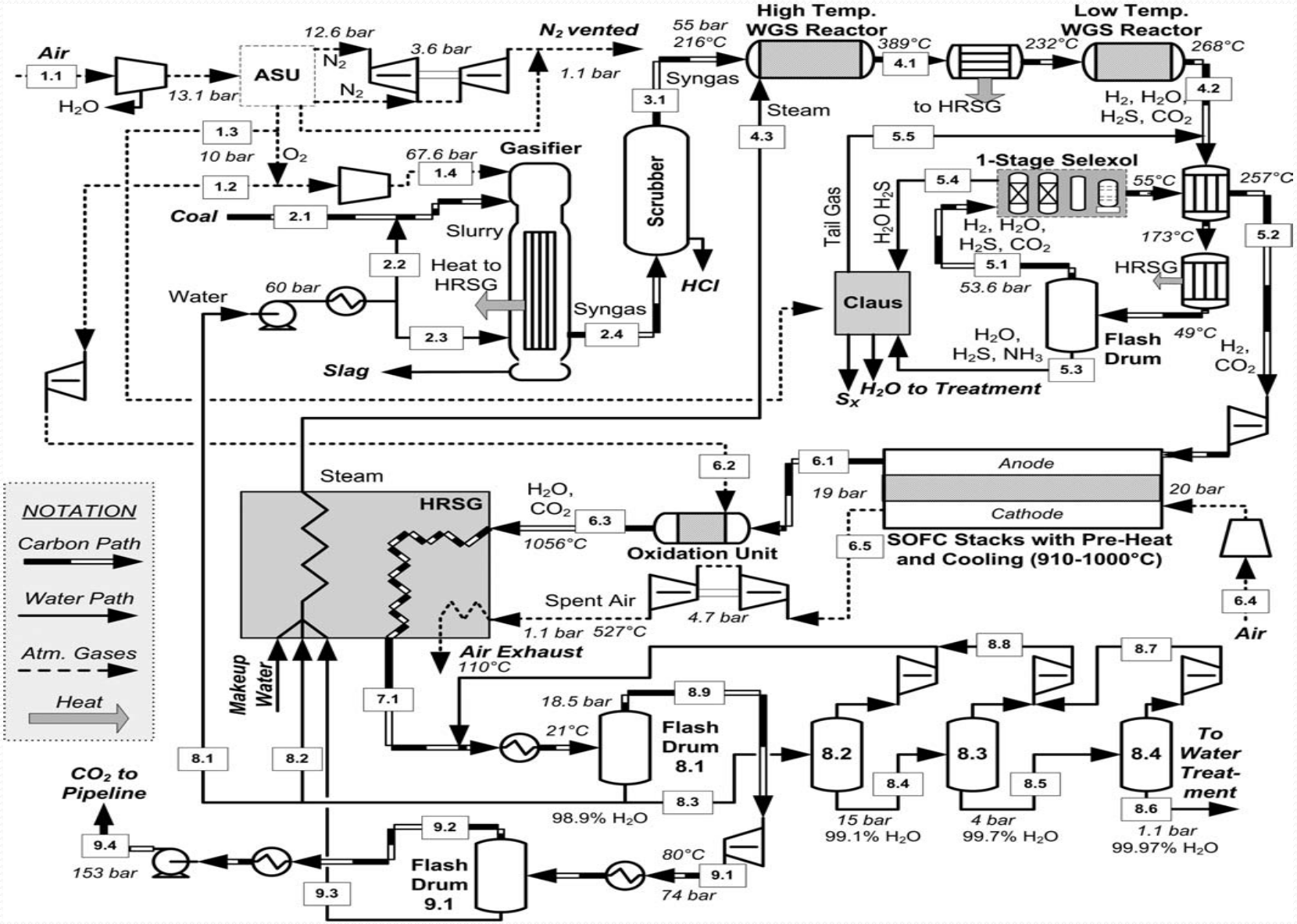

Process Overview

- Generate electricity from coal with zero emissions and 100% carbon capture
- Consists of air separation, gasification, cleaning, shifting, fuel impurity, power generation, heat recovery, **CO_2 recovery** and **CO_2 compression**
- CO_2 Recovery
  - Fuel exhaust is cooled to 21°C and flashed in Drum1
  - Liquid phase is further depressurized and separated in cascading flash drums
  - Vapor products are recycled to Drum 1, enabling nearly 100% CO_2 capture
- CO_2 Compression
  - CO_2 stream recovered from Flash Drum 1 is compressed to about 74 bar

Process Overview

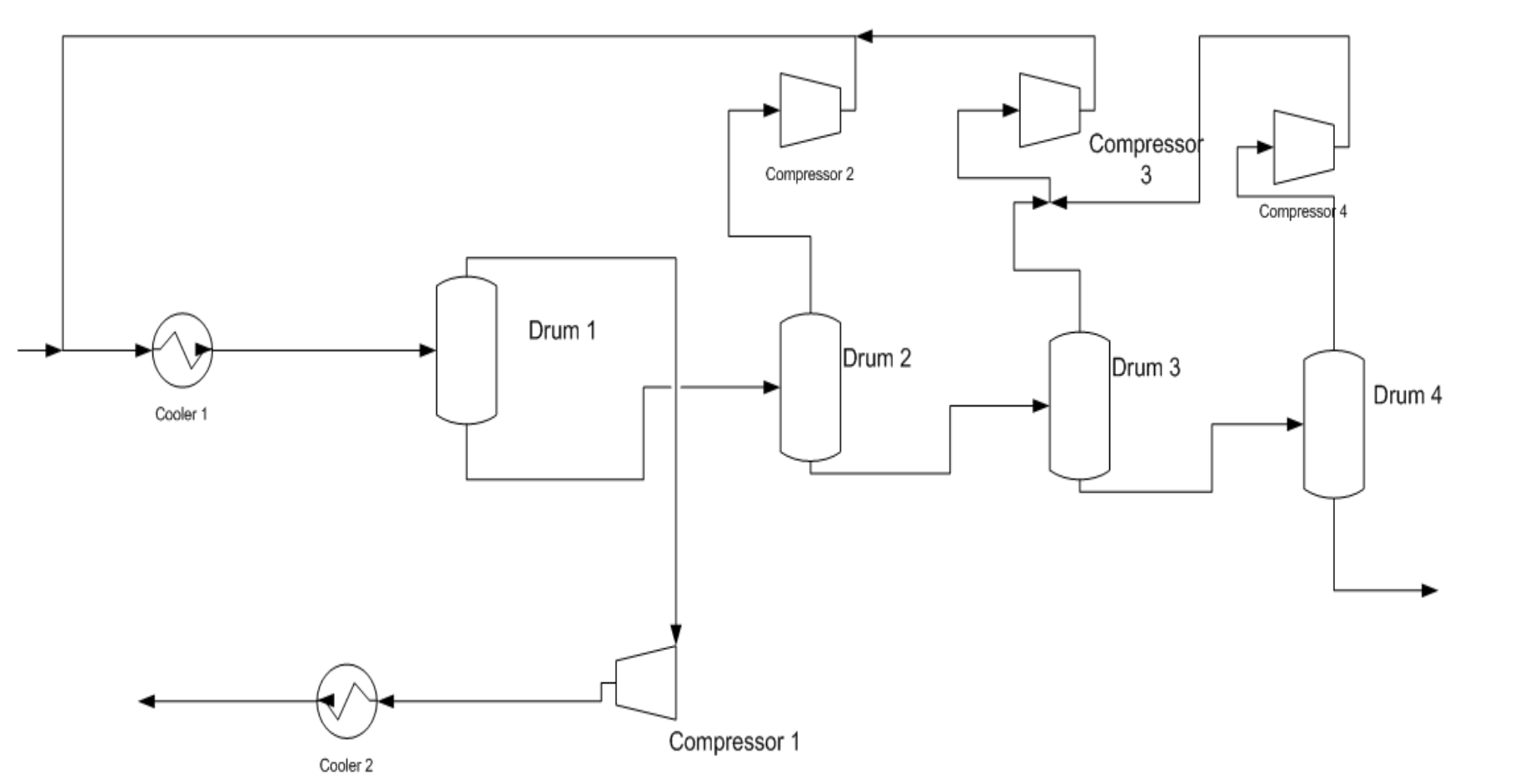

HAZOP

- Pressure of flash drum

Guide Words	Deviation	Causes	Consequences	Actions
Low	Low flash drum pressure	1.Lower feed temperature		
		2.Leakage in the flash drum		

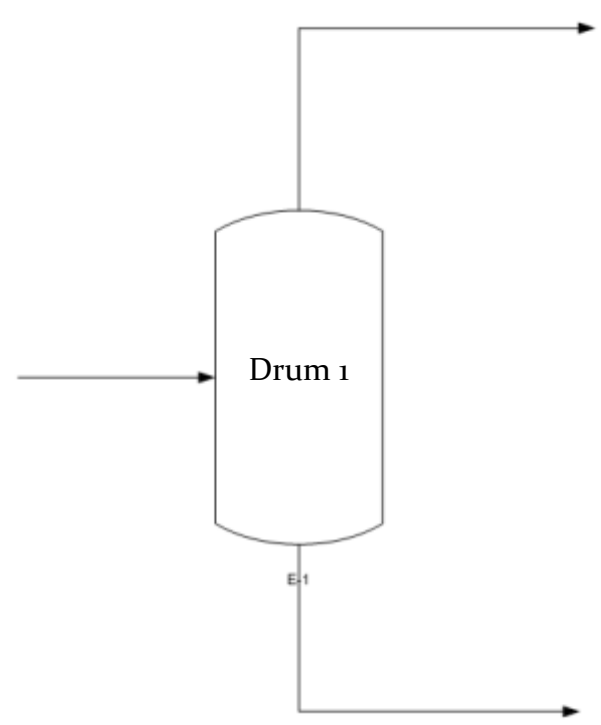

HAZOP

- Pressure of flash drum

Guide Words	Deviation	Causes	Consequences	Actions
Low	Low flash drum pressure	1.Lower feed temperature	-Higher liquid level	Install pressure and temperature controller for the drum
		2.Leakage in the flash drum	-Low CO_2 vapor recovered at the top of the flash drum	Install pressure indicator on the flash drum and replace the drum if required
High				

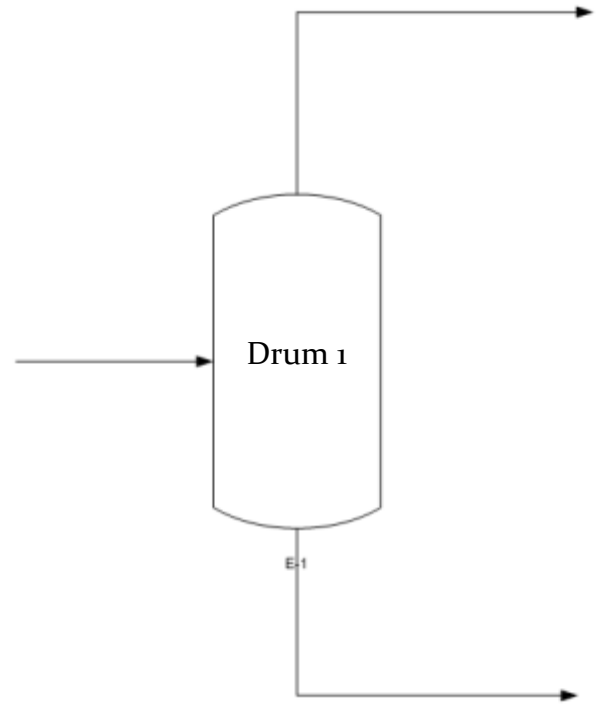

HAZOP

- Pressure of flash drum

Guide Words	Deviation	Causes	Consequences	Actions
Low	Low flash drum pressure	1.Lower feed temperature	-Higher liquid level	Install pressure and temperature controller for the drum
		2.Leakage in the flash drum	-Low CO_2 vapor recovered at the top of the flash drum	Install pressure indicator on the flash drum and replace the drum if required
High	High flash drum pressure	1.Higher feed temperature	-Lower liquid level, less CO_2 purity recovered	Install pressure and temperature controller for the drum
		2.Blockage in the vapor stream	-Less CO_2 recovered and risk of drum explosion	Install pressure alarm

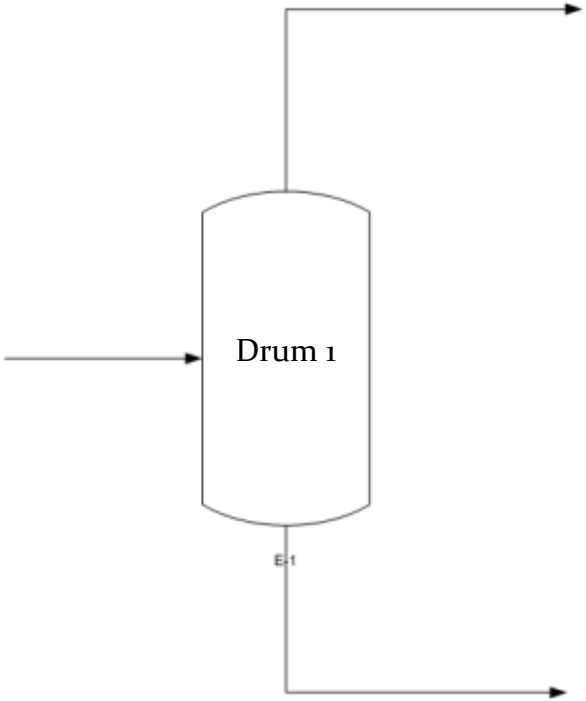

HAZOP

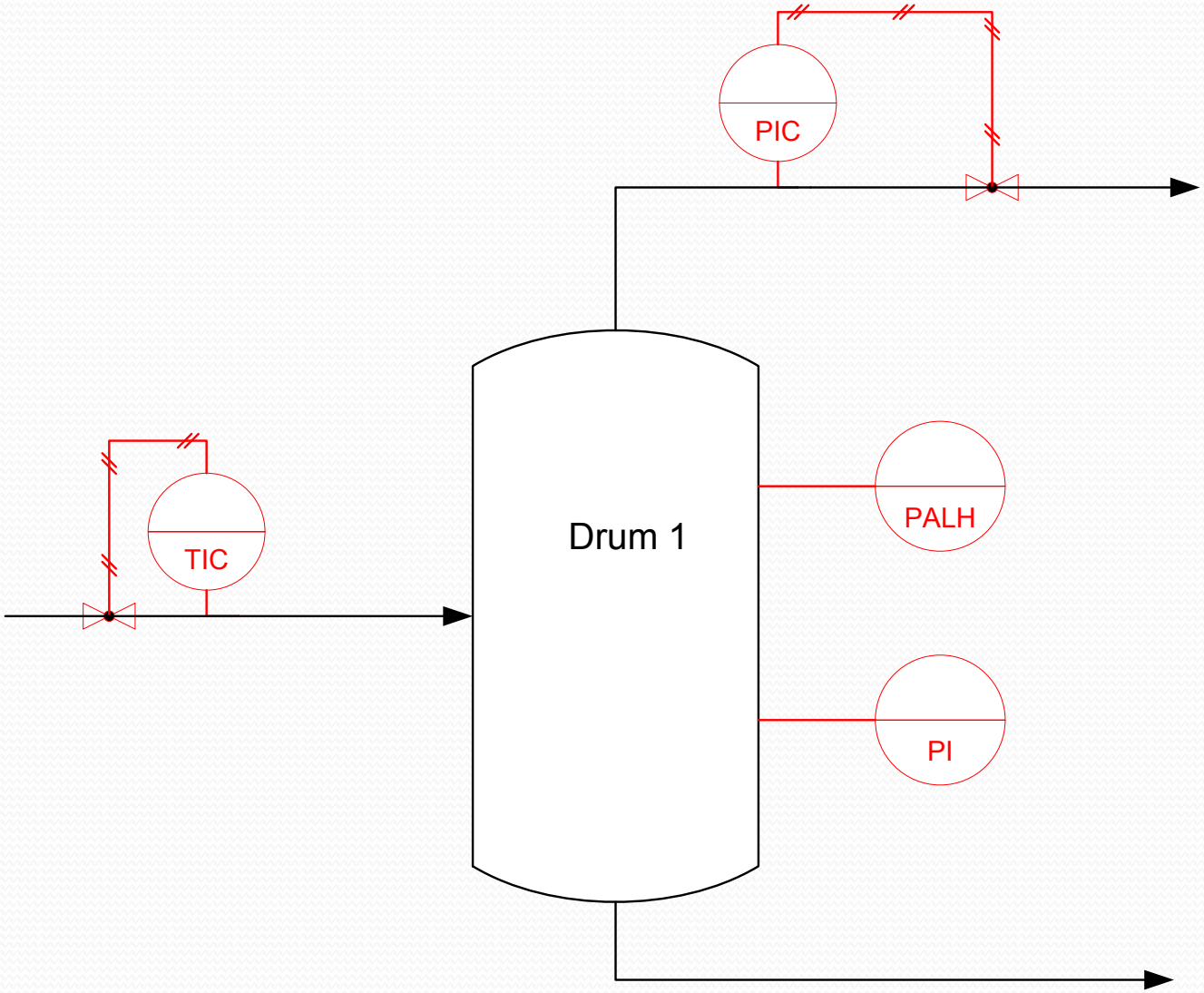

HAZOP

- Level of flash drum

Guide Word	Deviation	Cause	Consequence	Action
High	High level of liquid in flash drum	2.Inlet stream too cold		
		2.Blockage in the liquid stream		

HAZOP

- Level of flash drum

Guide Word	Deviation	Cause	Consequence	Action
High	High level of liquid in flash drum	2.Inlet stream too cold	-Less vapor fraction product resulting in possible compressor damage	-Install temperature controller on the feed stream -Install SIS on the compressor
		2.Blockage in the liquid stream	-Less liquid water leaving at the bottom	-Install level indicator -High level alarm should be installed
Low				

HAZOP

- Level of flash drum

Guide Word	Deviation	Cause	Consequence	Action
High	High level of liquid in flash drum	2.Inlet stream too cold	-Less vapor fraction product resulting in possible compressor damage	-Install temperature controller on the feed stream -Install SIS on the compressor
		2.Blockage in the liquid stream	-Less liquid water leaving at the bottom	-Install level indicator -High level alarm should be installed
Low	Low level of liquid in flash drum	1.Blockage in the inlet stream	-No separation occurs -Damage to pump	-Install pressure sensor on the feed stream -low level alarm
		2.The inlet stream is too hot	-No separation occurs -Damage to pump	-Install temperature controller on the feed stream -low level alarm

HAZOP

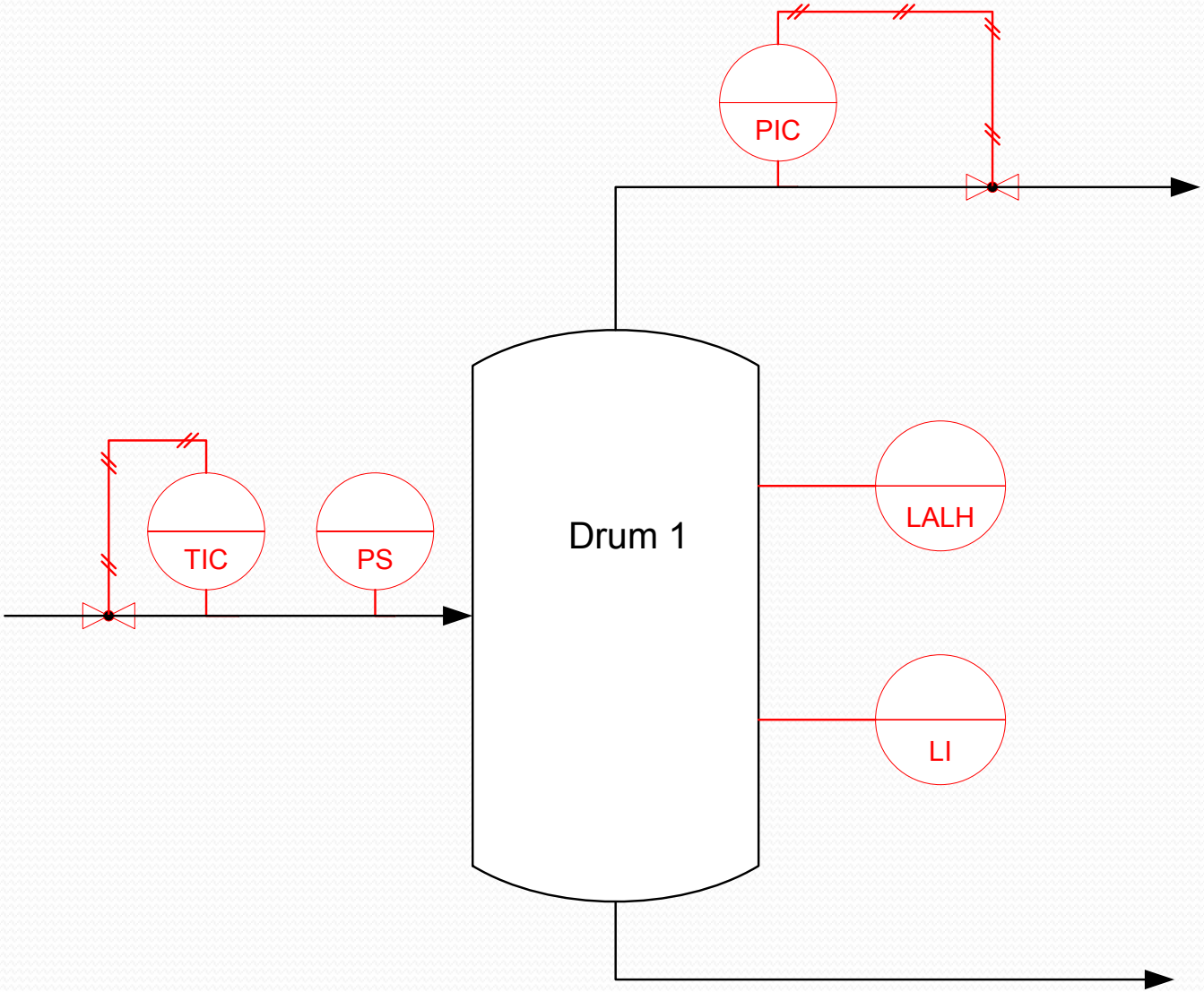

HAZOP

- What is Operability?
  - ✓ Any fluctuation in procedure that could lead to violation of health, safety, and environmental regulations
  - ✓ Negative impact on product yield
- Operating window
  - ✓ -50%-200%
- Reliability
  - ✓ Safety issues : Pressure build-up
  - ✓ Equipment damage: valves and pipes
  - ✓ Environmental: with base case (throughput) no emission of CO_2 takes place.
    - ❑ Increased throughput ,may lead to emission of CO_2 to the surrounding
  - ✓ Increase and/or decrease in throughput will lead to less production yield

Class Activity

Formaldehyde Synthesis from Methanol

CHEM ENG 4N04 2012

Thursday, November 29th, 2012

Group Members:
Angel Li
Fizza Anwar
Heather Van
Tolulope Fadiya
Xin Yuan

Introduction

- What is Formaldehyde?
- Silver catalyst vs. Metal oxide catalyst

Process overview

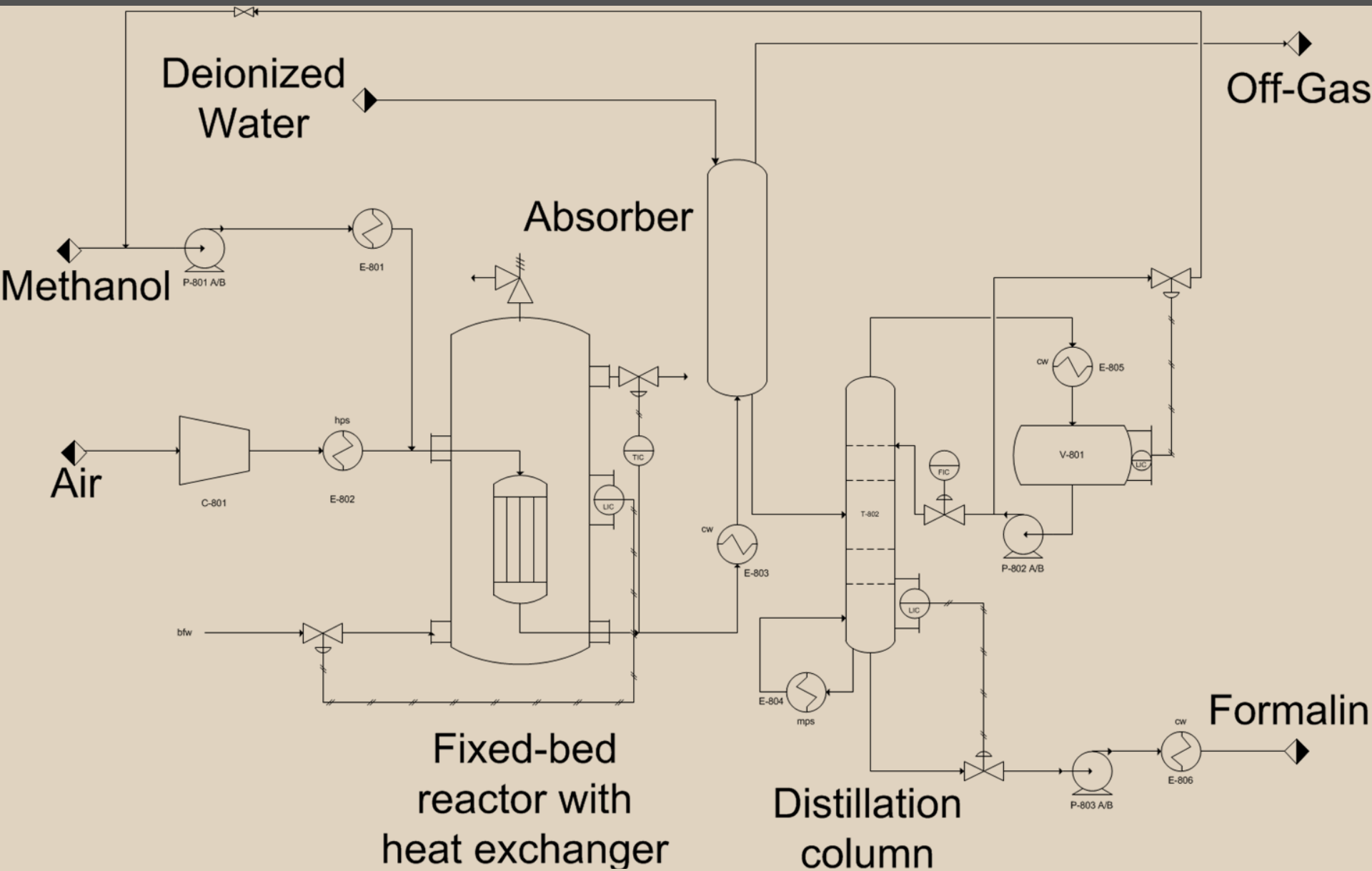

$$CH_3OH + \frac{1}{2}O_2 \rightarrow HCHO + H_2O \quad \Delta H = -37.3\,kcal/mol$$

$$CH_3OH \rightarrow HCHO + H_2 \quad \Delta H = 20.3\,kcal/mol$$

HYSYS simulation

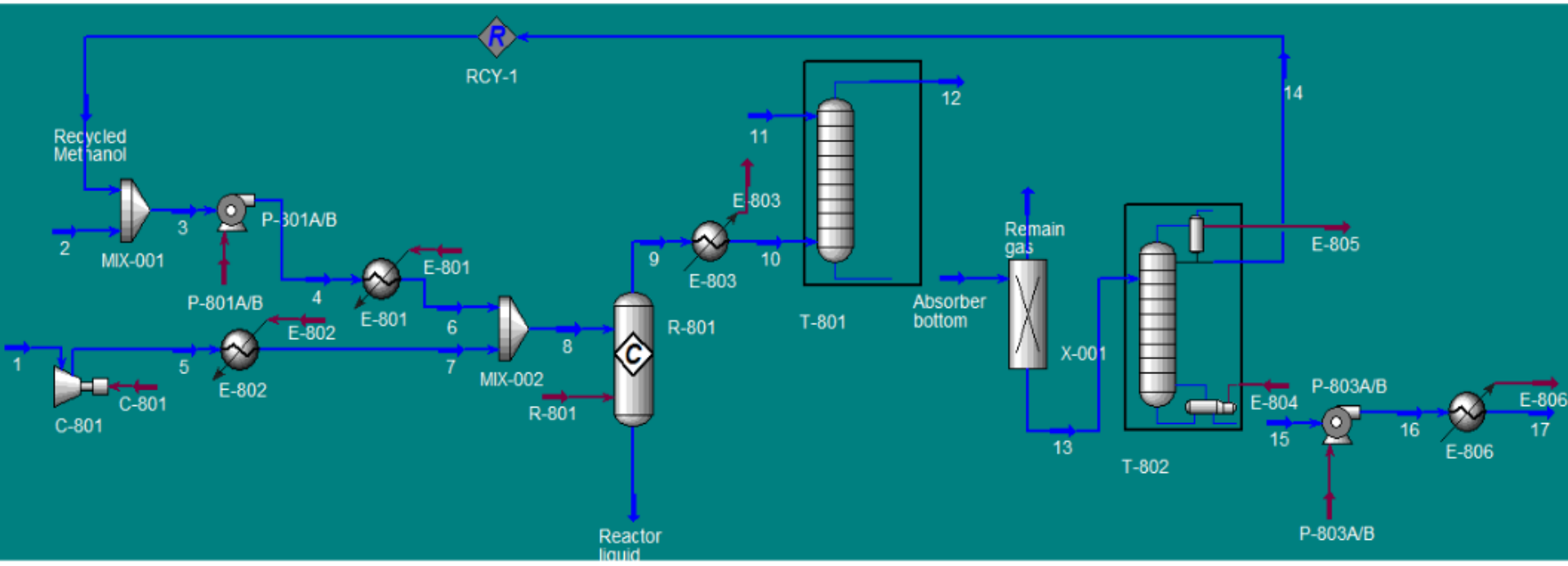

NRTL fluid package

Conversion reactor:

- 40% exothermic reaction
- 35% endothermic reaction

Tray absorber & distillation column:

- Absorber - 20 trays
- Distillation tower - 31 trays, feed on tray 18

Methanol Feed	80 kgmol/hr	Production capacity	180 kgmol/hr
Air Feed	145 kgmol/hr	Formaldehyde concentration	47 wt %
DI Water Feed	145 kgmol/hr	Methanol concentration	< 1 wt %

Operability - Methanol flammability

UFL - 36 mol% LFL - 6 mol%

Need to operate outside the flammable range

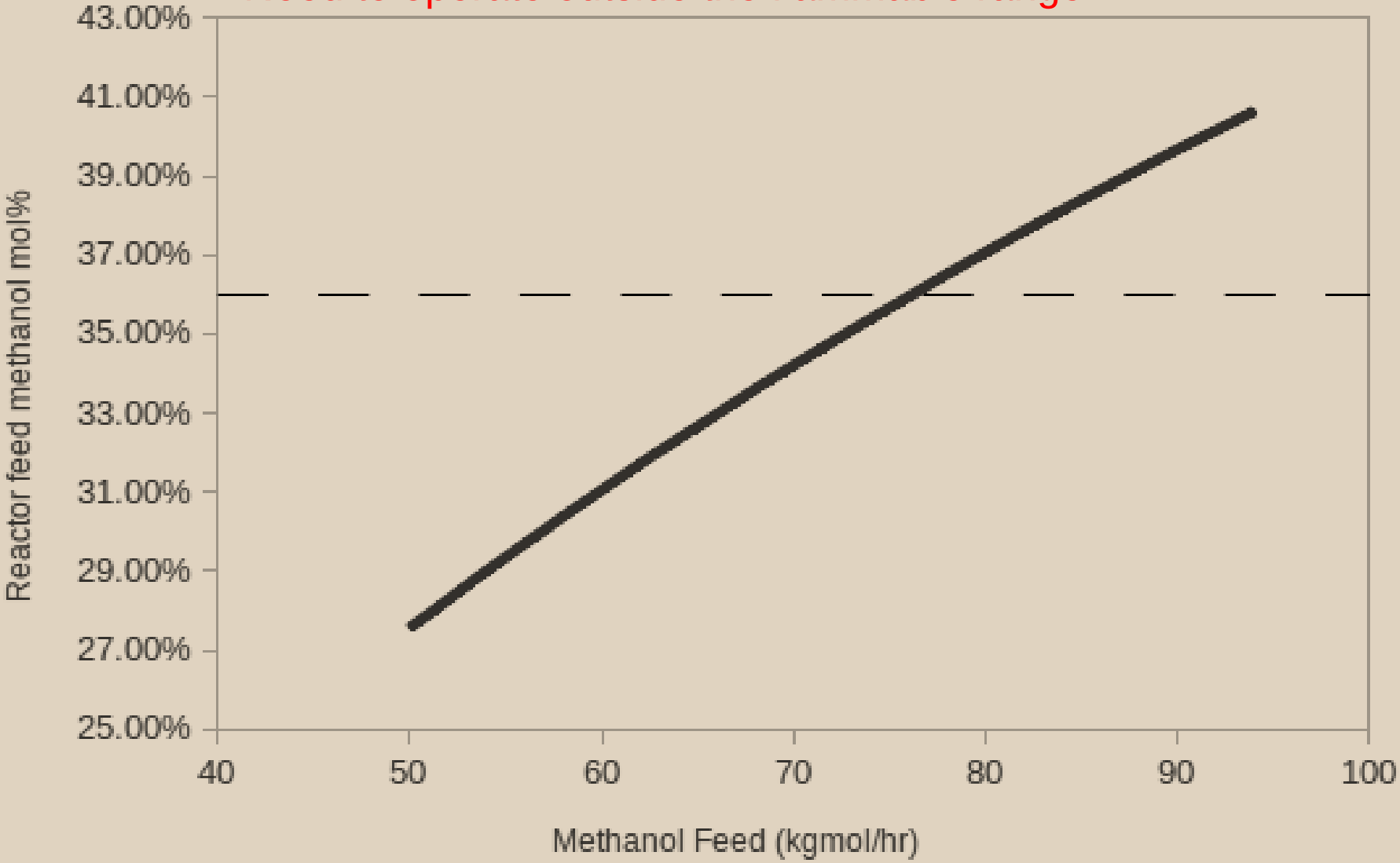

Operability - Formalin concentration

Commercial grade formalin - 37 wt% formaldehyde
Product needs higher concentration to allow flexibility

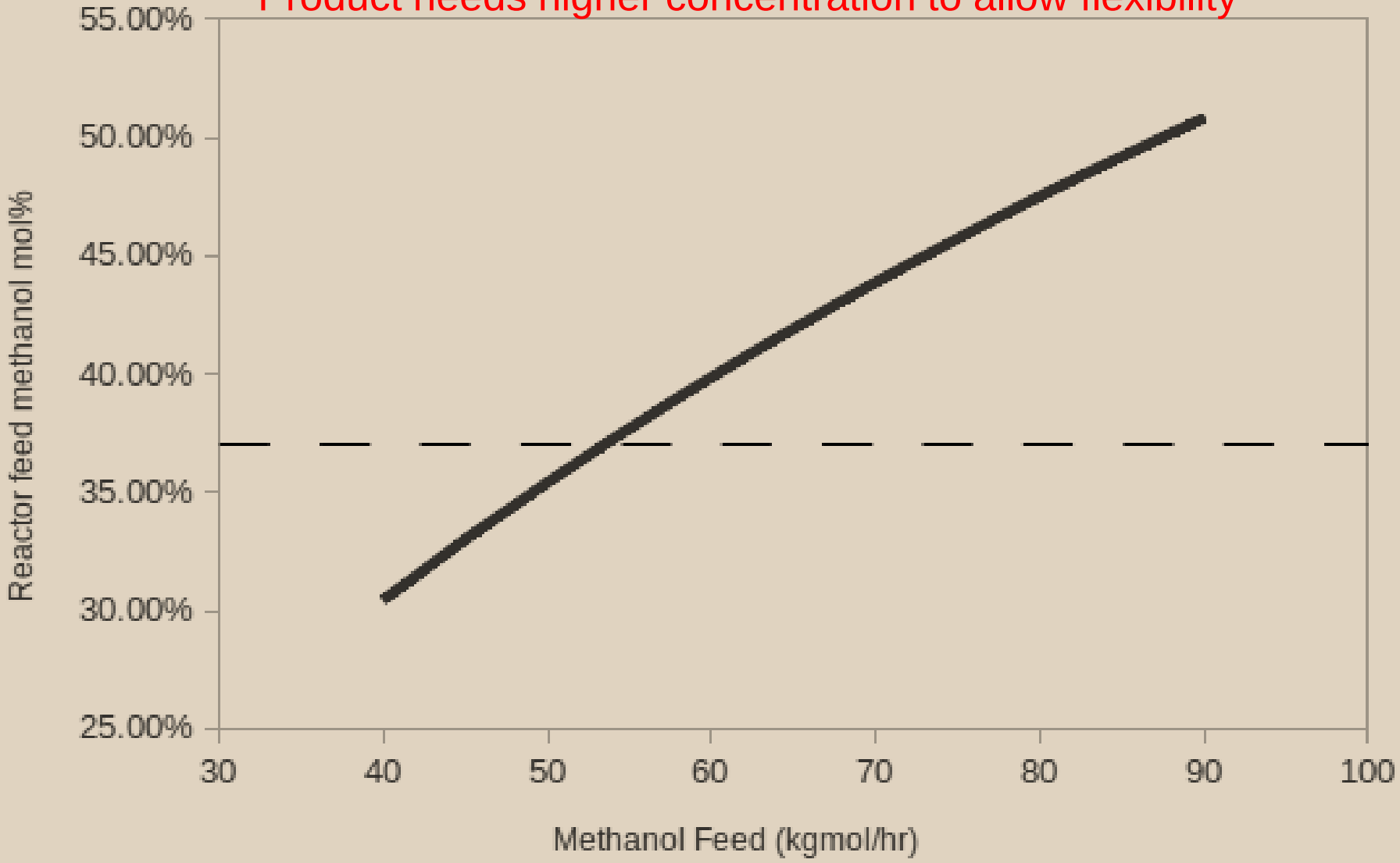

Operability - Operating window

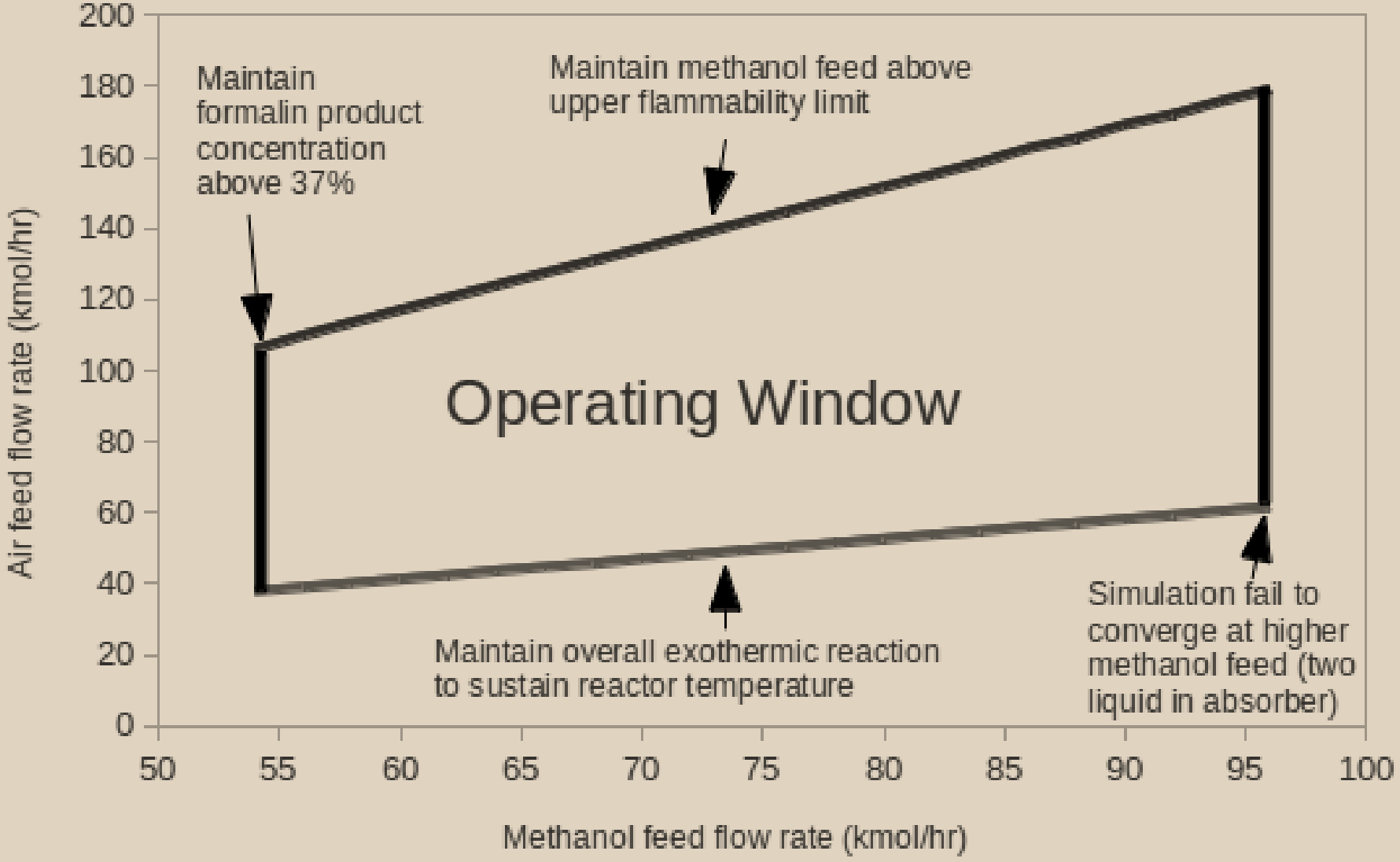

Operability - Water Ballast

By adding water vapour to feed methanol, distillation is not necessary if lower formalin concentration is acceptable

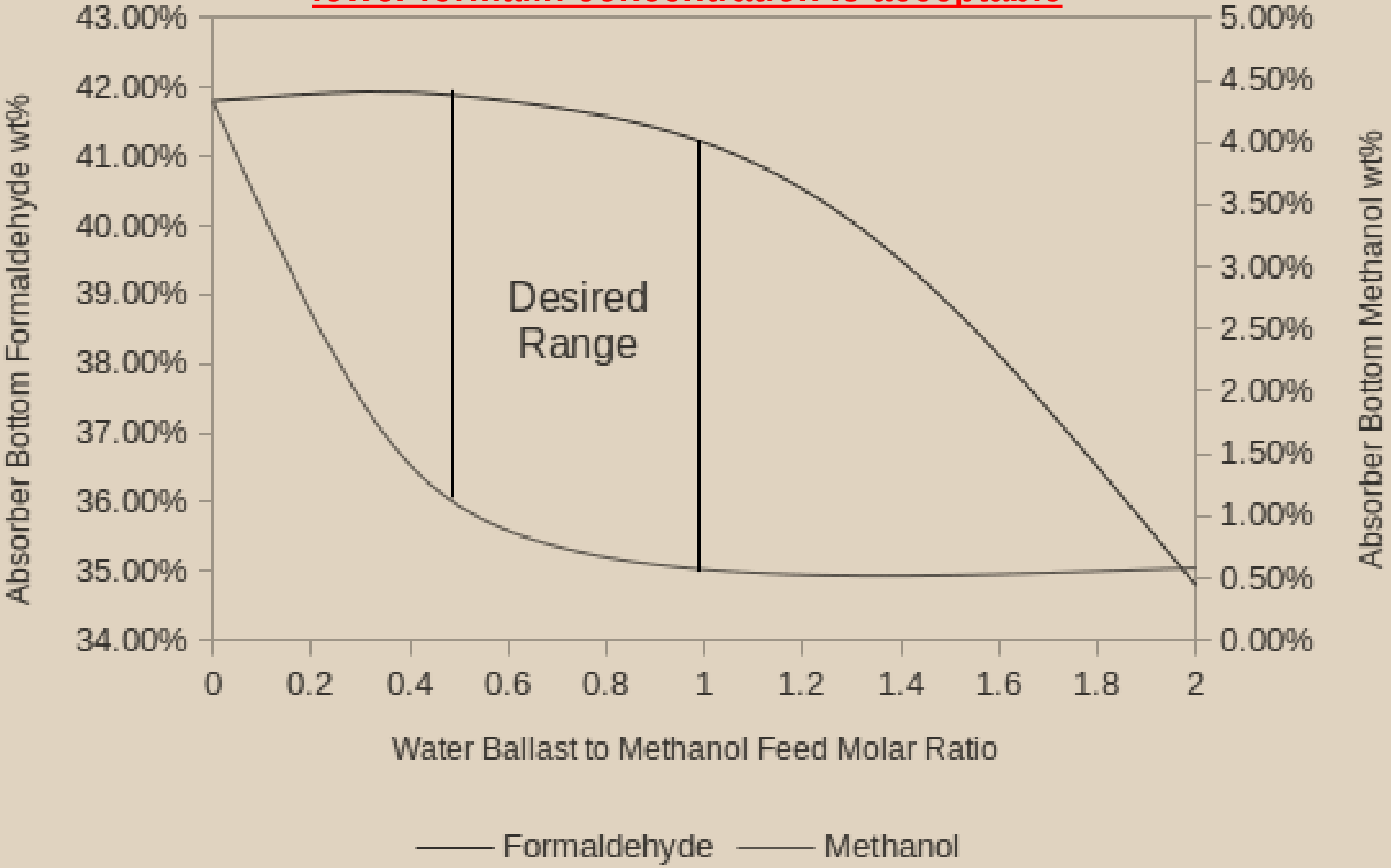

Economic impact of water ballast

- Equipment cost with distillation column vs. without distillation

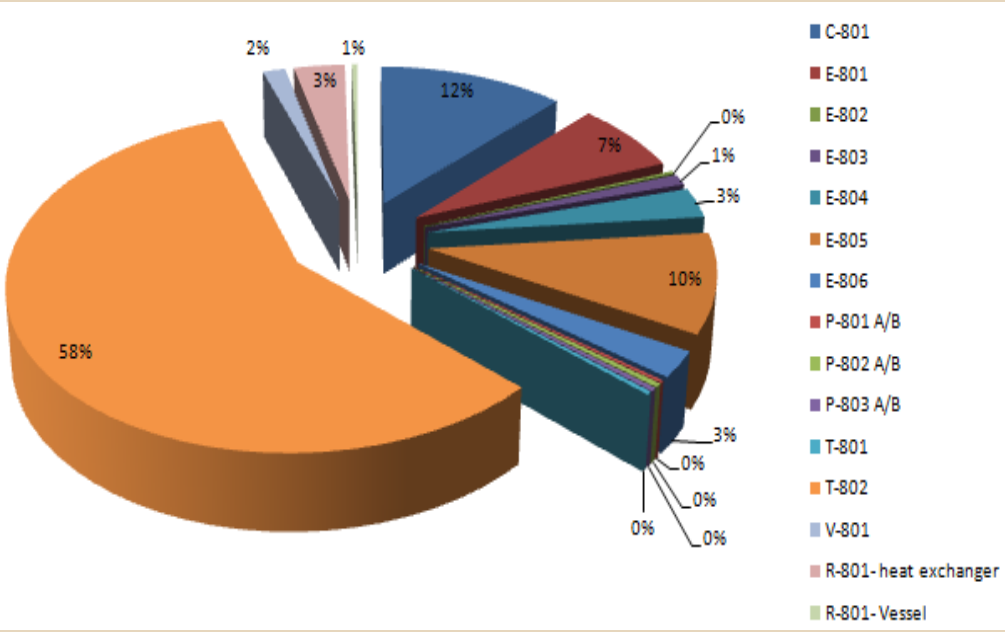

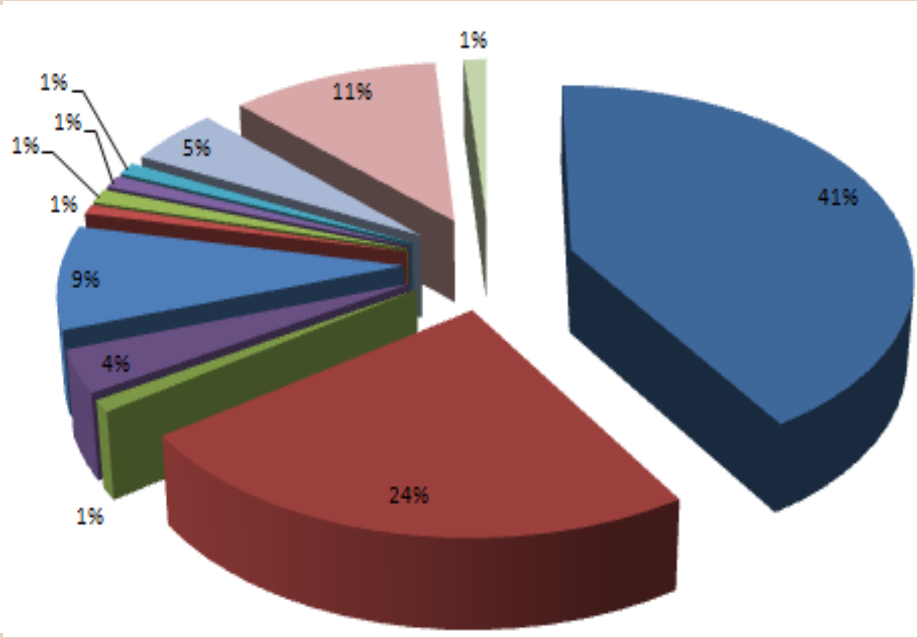

- Total Equipment cost: $5,253,755 vs. $1,6801,109
- 70% reduction in equipment cost without distillation column

PFD for water ballast process

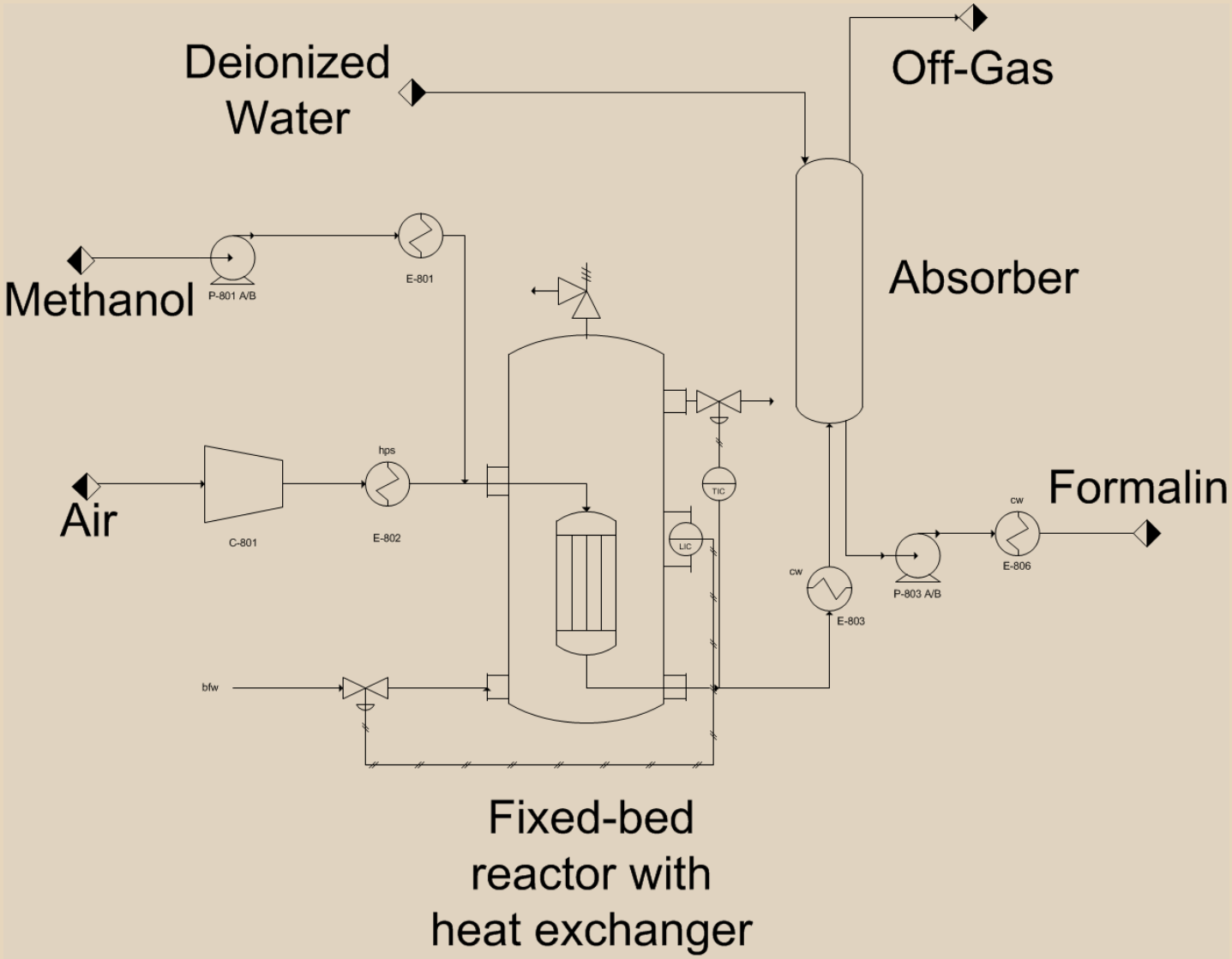

Reactor P&ID for safety, flexibility, reliability & start-up

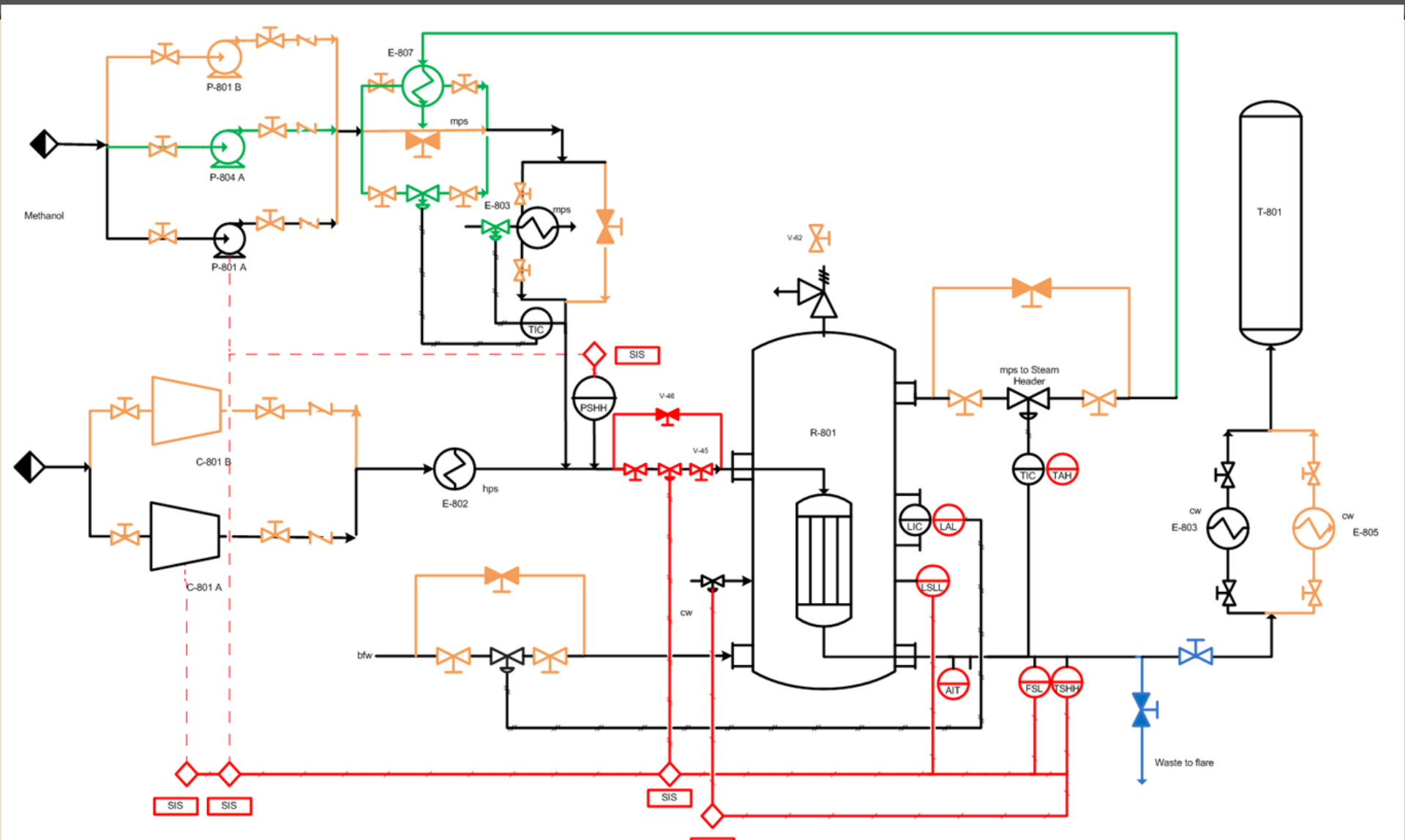

Lets play JJJJeopardy

Process Safety	Process Overview	Operability & Economics
100 Points	100 Points	100 Points
200 Points	200 Points	200 Points
300 Points	300 Points	300 Points

Cogeneration

Adriana Daca
Deanna Riddolls
Derek Seguin
Laila Siddiqui
Amy Vilcu

Group B3

Nov 29, 2012

Agenda

- Process Overview
- Economics
- Operability
- Interactive Activity

Process Overview

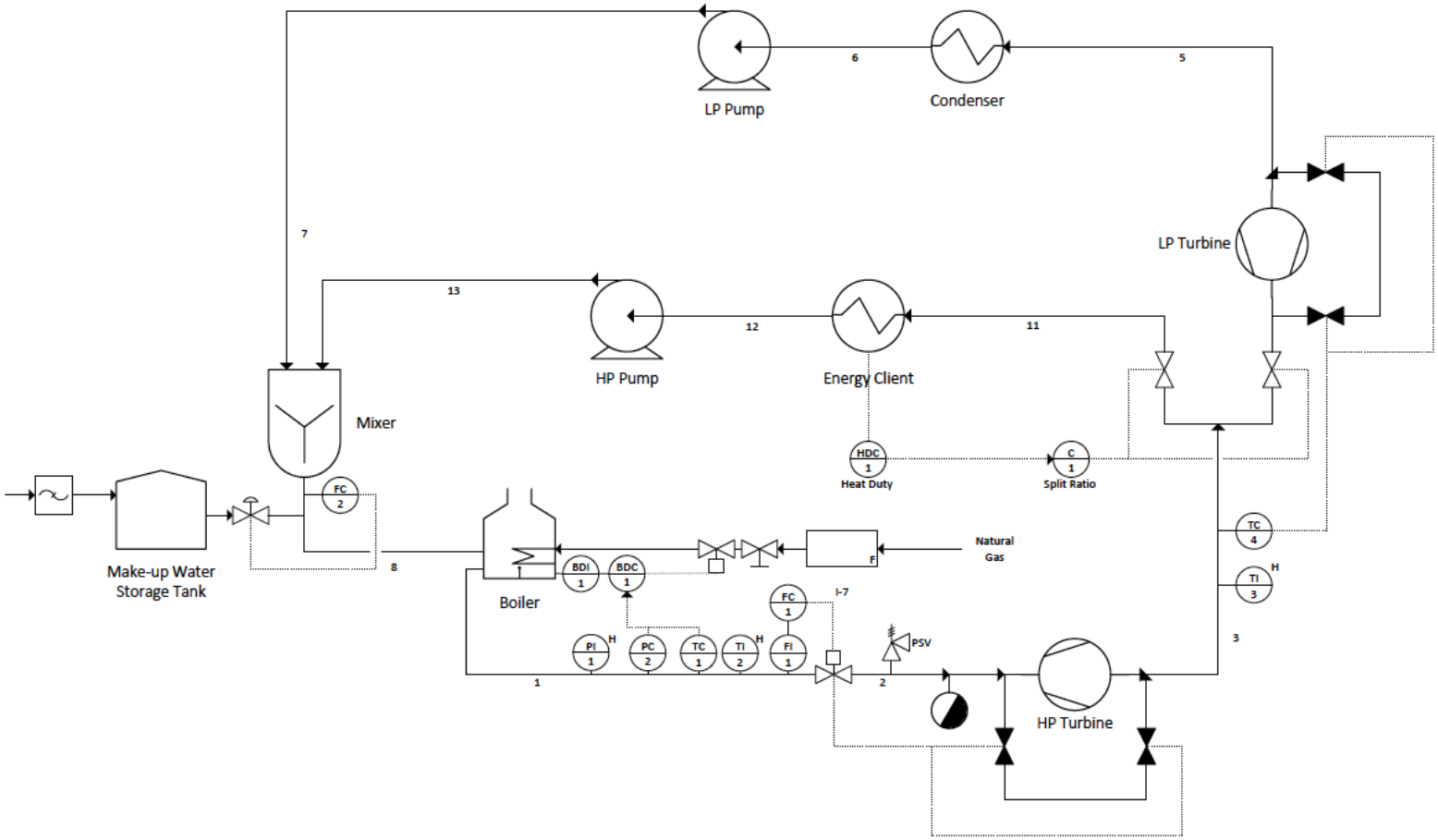

Turbine	Inlet Pressure (psig)	Outlet Pressure (psig)
HP-Turbine	319.08	29.01
LP-Turbine	29.01	1.45

Economics

Electricity Costs

- Pumps require electricity
  - Total power required: ***25 kW***
  - Costs: ***7.4 ¢/kW-hr***
  - Annual cost: approx. ***$191,000***
- Power generated by turbines:
  - Worst case: ***1.19 MW***
  - Best case: ***2.26 MW***

Selling Back to Grid

- Can sell back at rate of ***13.1 ¢/kW-hr***
- In worst case, profit from selling all generated electricity would be approx. ***$1.9 million***
- In best case, profit would be approx. ***$3.7 million***
- It is most profitable to ***sell all the energy generated*** and buy back the energy required for the pumps at the lower rate

Operability

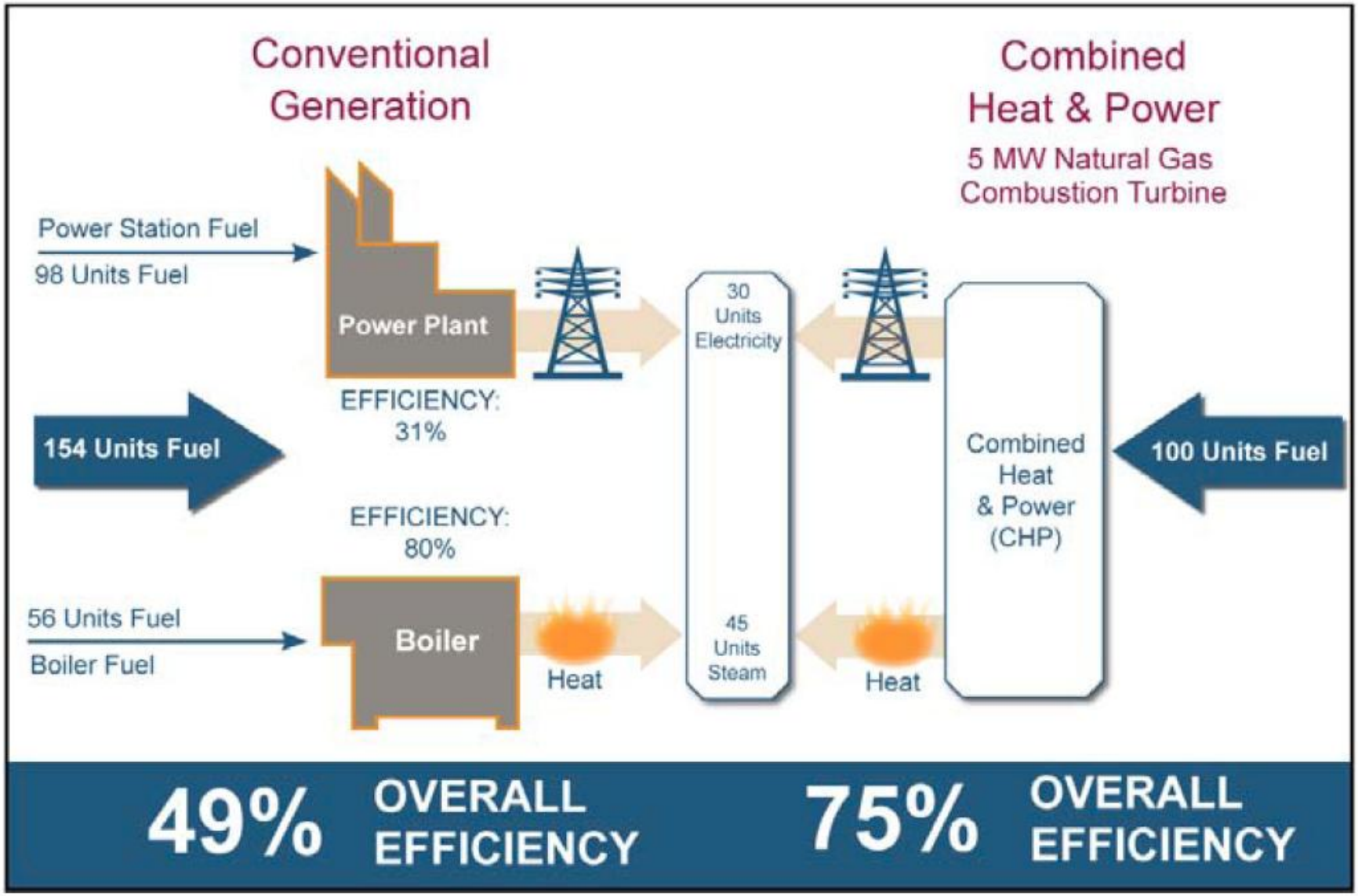

Source: Catalog of CHP Technologies. *U.S. Environmental Protection Agency Combined Heat and Power Partnership*. December 2008.

Efficiency

$$EFF_{FERC} = \frac{(P+Q/2)}{F}$$

- Overall efficiency calculation
- Recommended by the Federal Energy Regulatory Commission (US)

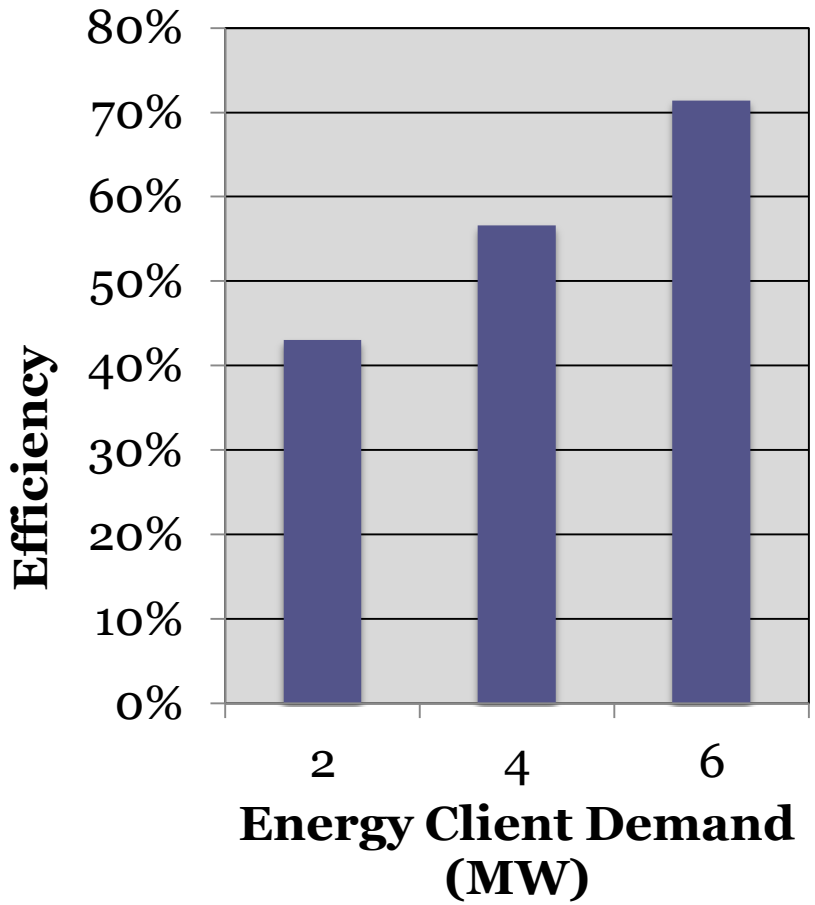

Flexibility

- 24/7 operation with varying demands
- Main control loops:

Controller	Measured/ Controlled Variable(s)	Manipulated Variable(s)
1	Boiler outlet (stream 1) temperature Boiler outlet (stream 1) pressure	Natural gas flow rate
2	Boiler inlet (stream 8) flow rate	Make-up water flow rate
3	Condenser outlet temperature	Chilled water flow rate
4	Energy client demand	Recycle ratio

Start-up & Shut-down

- Steam turbines have thick casing
  - Large thermal inertia
- Large temperature differential

Therefore, must be warmed up & cooled down slowly

- Moisture in turbine results in stress corrosion cracking and corrosion fatigue

Therefore, must eliminate moisture during shut-down using purge gas

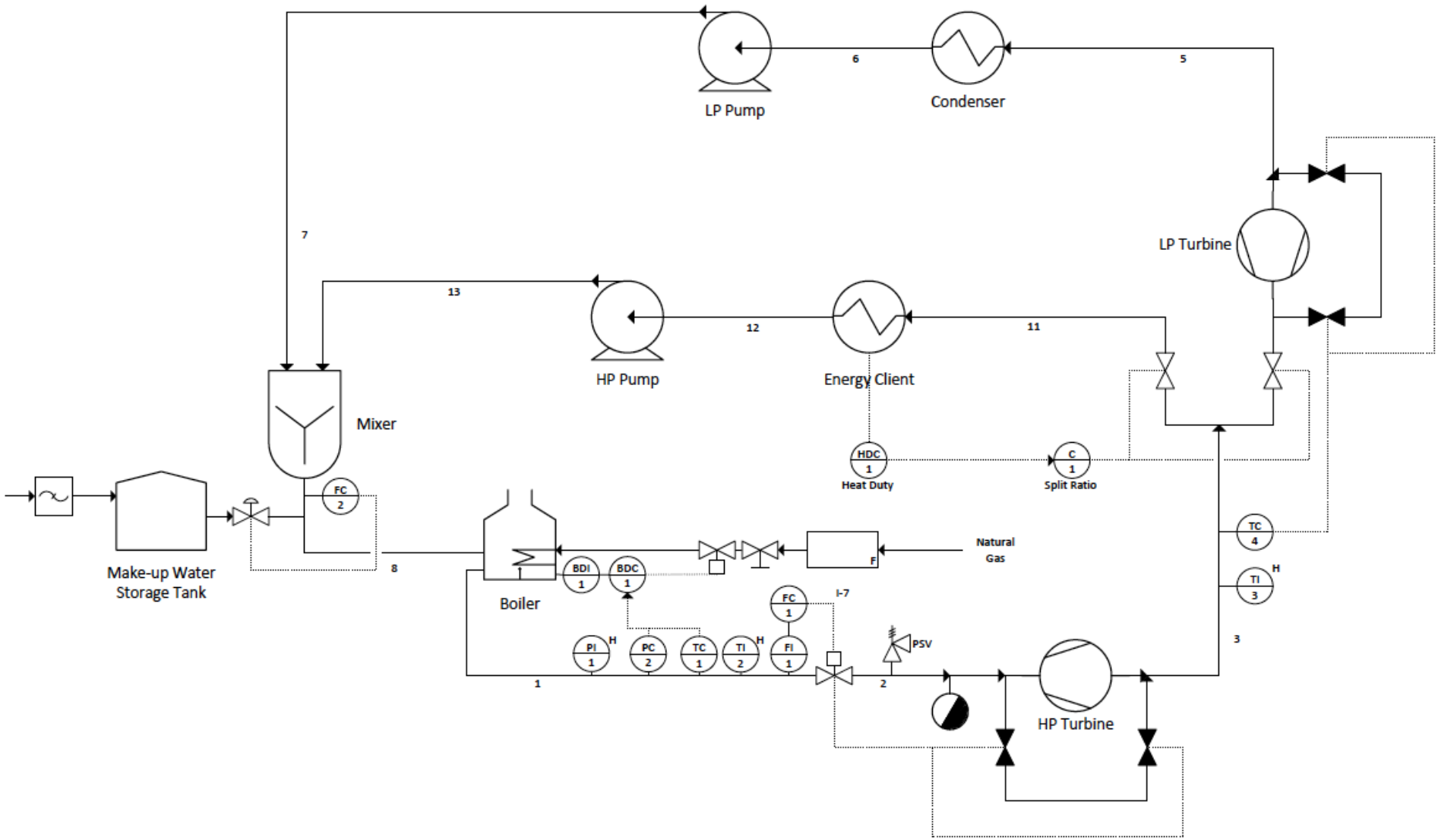
LP Pump
6
Condenser
5
7
LP Turbine
13
12
11
HP Pump
Energy Client
Mixer
HDC
1
Heat Duty
C
1
Split Ratio
FC
2
TC
4
Make-up Water
Storage Tank
8
Boiler
BDI
1
BDC
1
F
Natural
Gas
TI
3
H
FC
1
I-7
PI
1
H
PC
2
TC
1
TI
2
H
FI
1
PSV
3
1
2
HP Turbine

Interactive Activity

Group Activity

Build your own Co-Generation Steam Plant

- Two teams will compete to correctly assemble a co-generation steam plant
- Components Include: HP/LP Turbine, Boiler, Energy Client and Condenser

Recognize me? :D

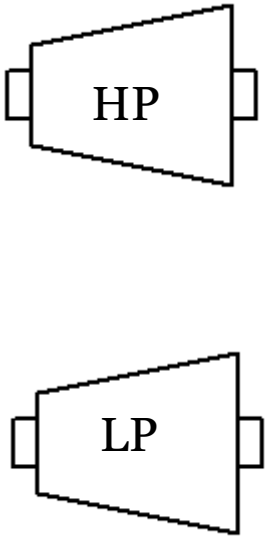

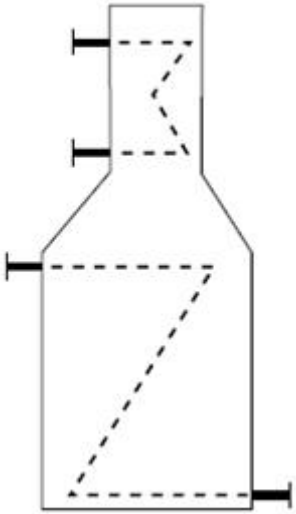

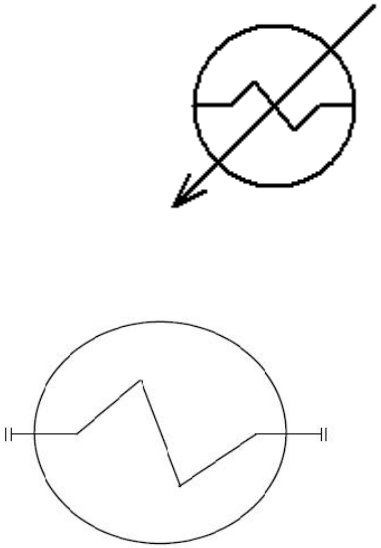

Energy Client