HAZOP Analysis of P-Xylene Production

Aleah Henry
Anastasiya Laktyushkina
Heera Marway
Jonathan Howell
Sean Bowen

Overview

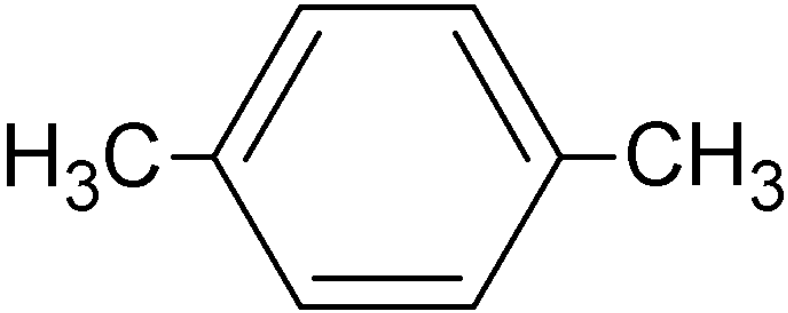

What is para-Xylene?

What does it come from?

What is it used for?

Who produces it?

How is it produced?

p-Xylene Production Process

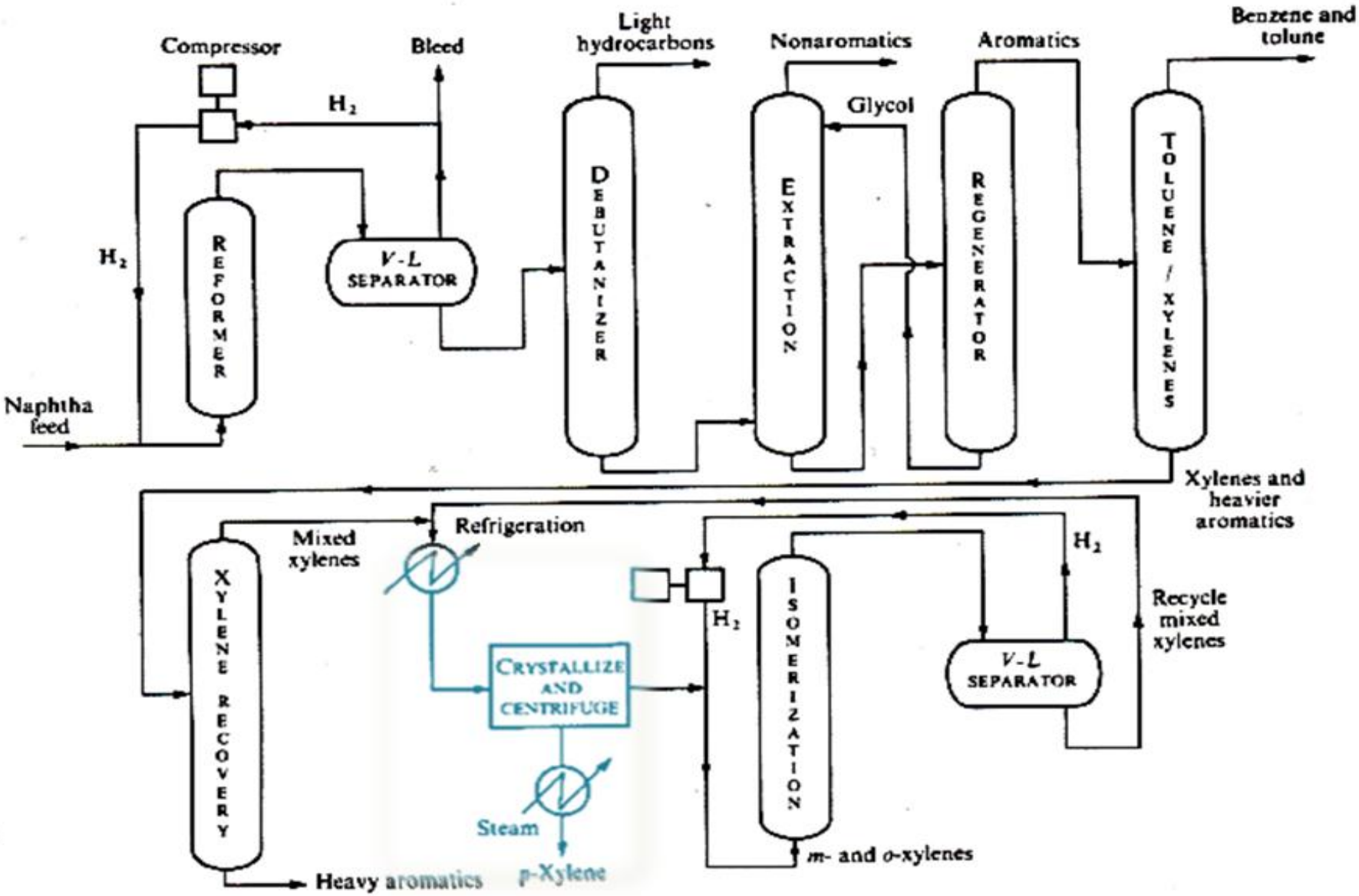

Scope

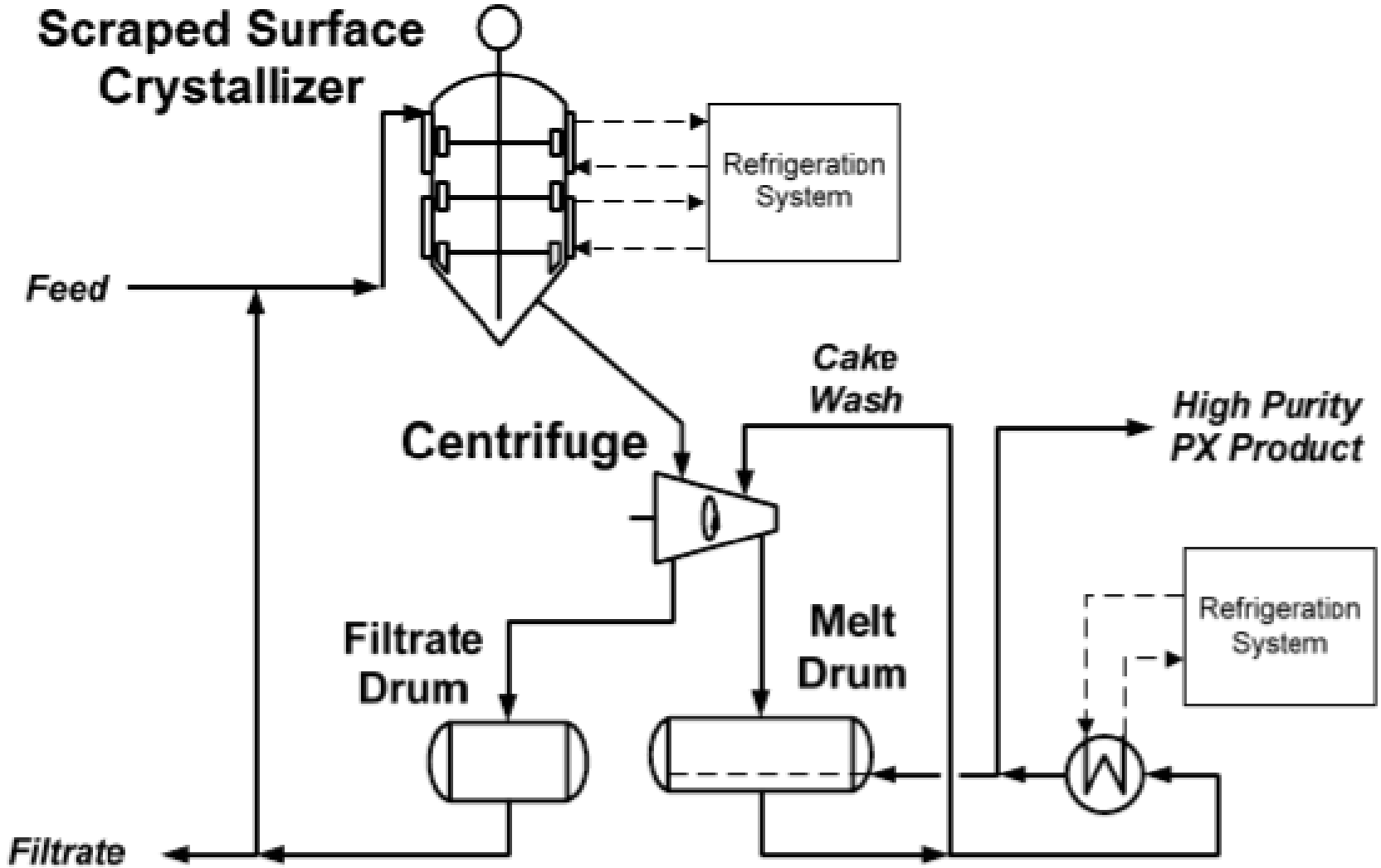
Scraped Surface Crystallizer
Refrigeration System
Feed
Cake Wash
High Purity PX Product
Centrifuge
Refrigeration System
Filtrate Drum
Melt Drum
Filtrate

HAZOP-Melt Tank

Flow from Pipe 16

Guide Word	Cause
High	1)Blockage in V-10 to pipe 15
Low	1)Blockage in V-10 2)Fouling in the pipes 3)Leakage

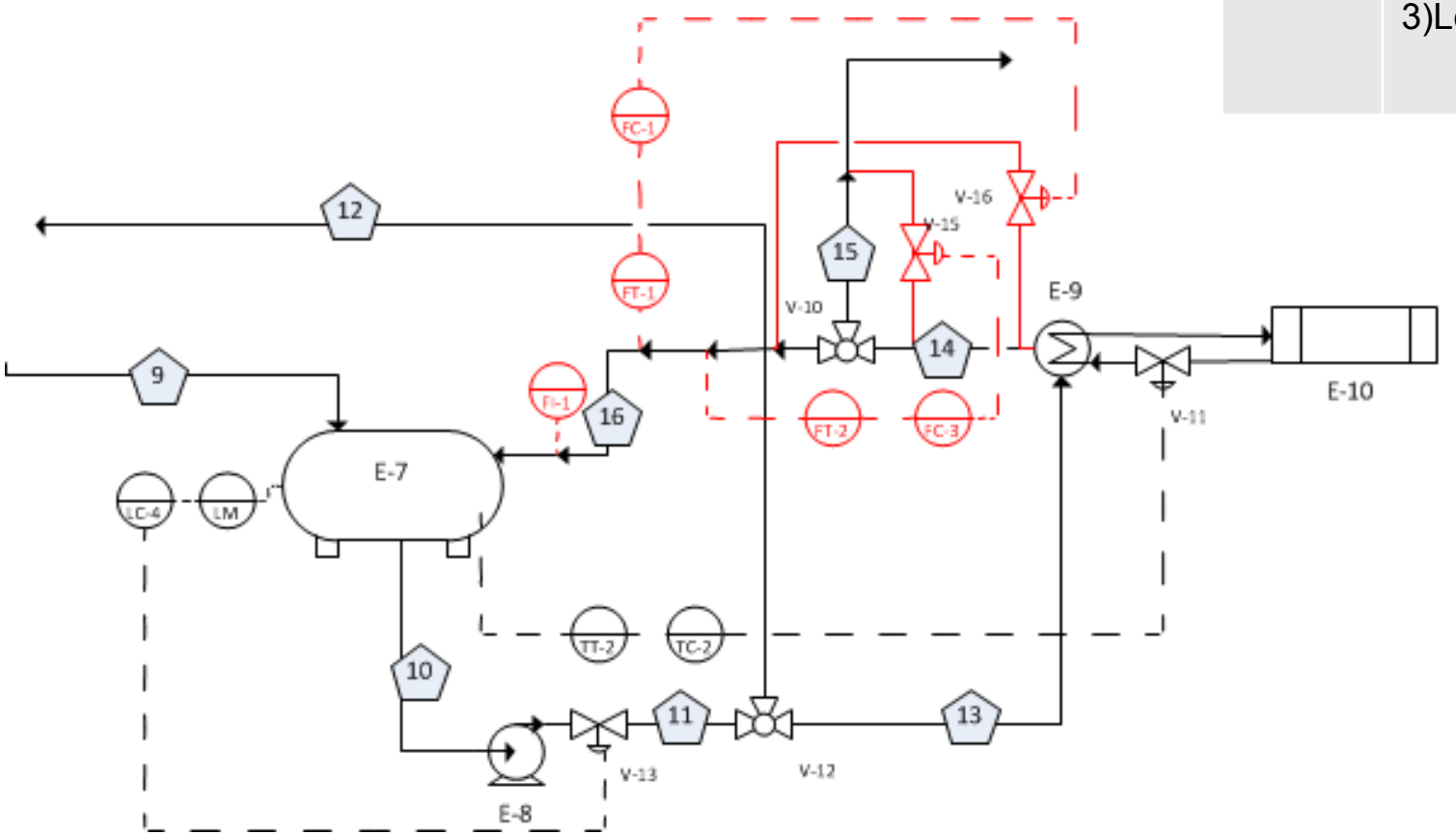

HAZOP-Melt Tank

Flow from Pipe 16

Guide Word	Deviation	Cause	Consequence	Action
High	Flow from pipe 16 to melt tank is too high	1)Blockage in V-10 to pipe 15 2)Flow indicator is malfunctioning	1)Decreased production 2)Possible damage to pipe 16	Add a redundant valve with a flow control
Low	Flow from pipe 16 is too low	1)Blockage in V-10 2)Fouling in the pipes 3)Leakage	1)2)Crystals not fully melted-damage to pump and fouling 3)Loss of profit	1) Add a redundant valve with a flow controller 2)Increase the temperature of p-xylene

HAZOP-Melt Tank

Temperature of P-xylene from Pipe 16

Guide Word	Cause
High	1)TC-2 is not functioning properly, temperature sensor fails 2) V-11 is malfunctioning
Low	1)TC-2 is malfunctioning 2) Blockage in V-11

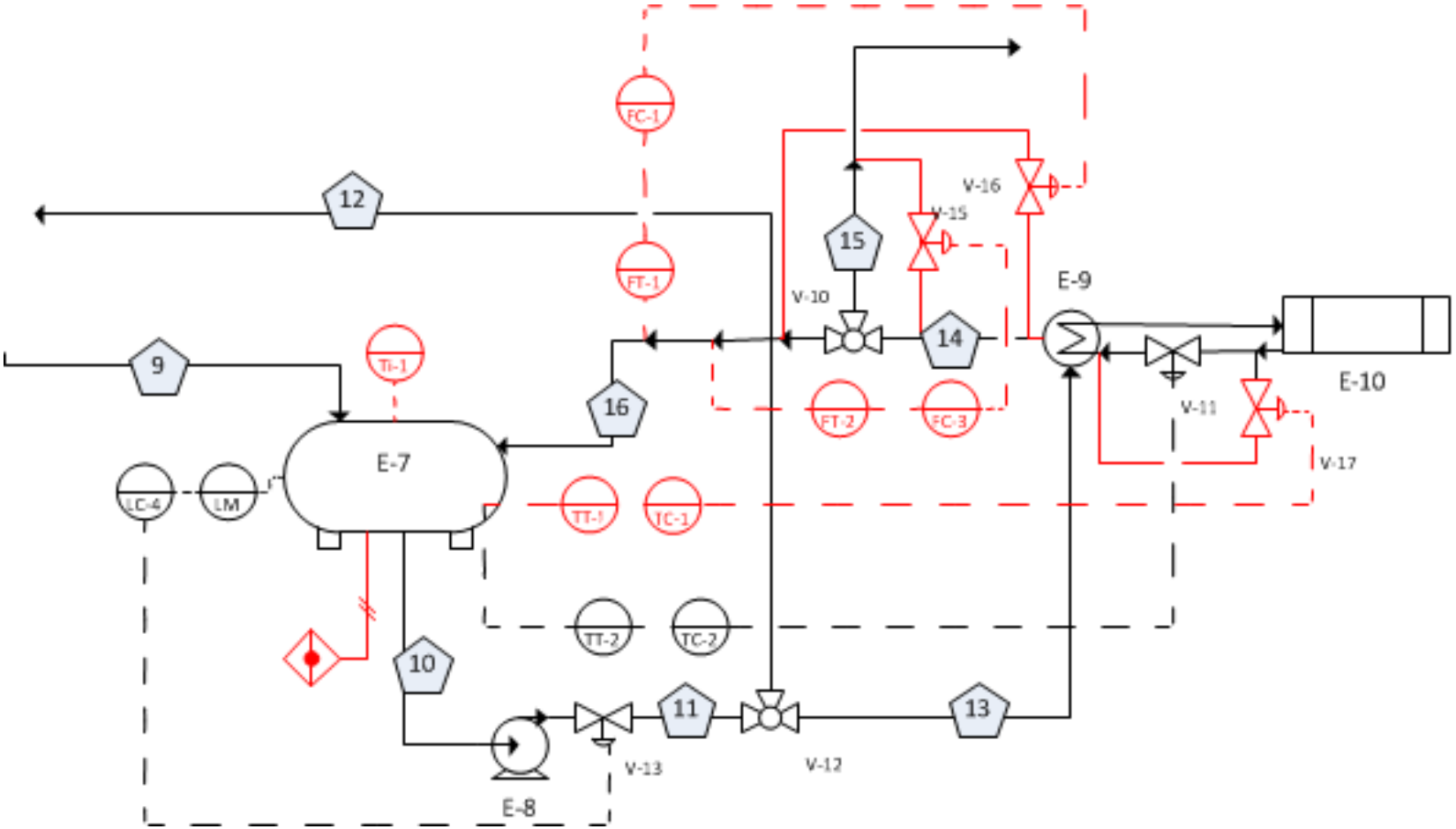

HAZOP-Melt Tank

Temperature of P-xylene from Pipe 16

Guide Word	Deviation	Cause	Consequence	Action
High	Temperature of stream 16 is too high	1)TC-2 is not functioning properly 2) V-11 is malfunctioning	1)2)Energy costs are higher 1)2) Continuous input of hot material into tank cause rapid and unstable temperature increase	1) Add a temperature indicator on melt tank 2)Redundant temperature control via bypass of V-11
Low	Temperature of stream 16 in to low	1)TC-2 is mal functioning 2) Blockage in V-11	1)2)Crystals not fully melted-damage to pump and fouling	1)Redundant temperature control via bypass of V-11 2)Add an alarm on the Melt tank

p-Xylene Fun

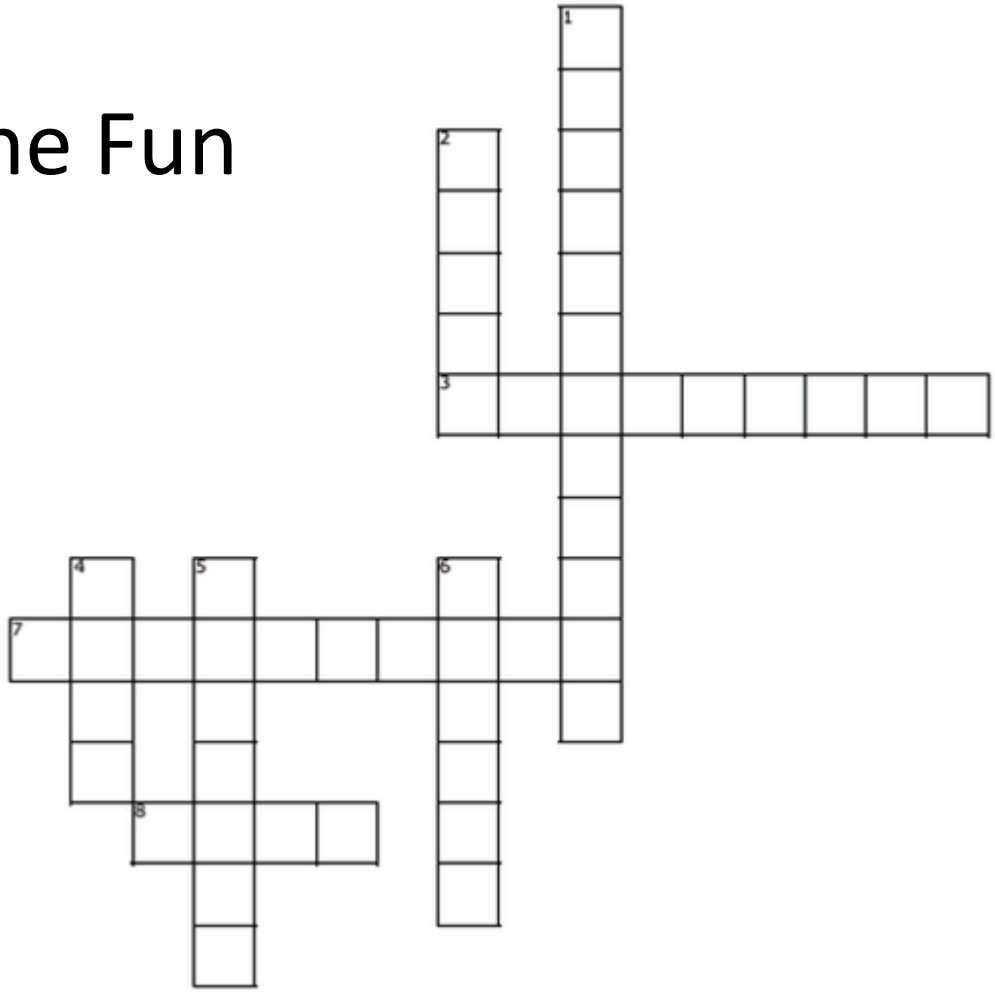

Across

3. P-xylene is mainly used for the production of
7. Used after the crystallizer for separation
8. What the "p" stands for in p-xylene

Down

1. Main separator step
2. Acronym for a type of safety analysis
4. Type of drum used in process
5. Tanks used to hold feed or product
6. We mainly investigated this stage, comes after recovery and scavenger stages

Urea Production

Group A7

Plant Overview

Safco 4 - Urea Production Plant

-Jubail, K.S.A. Kingdom of Saudi Arabia

-Saudi Arabian Fertilizer Company

-One of the largest producers of urea in the world.

-Single train urea plant with a capacity of 1.1 mtpa

Process Overview

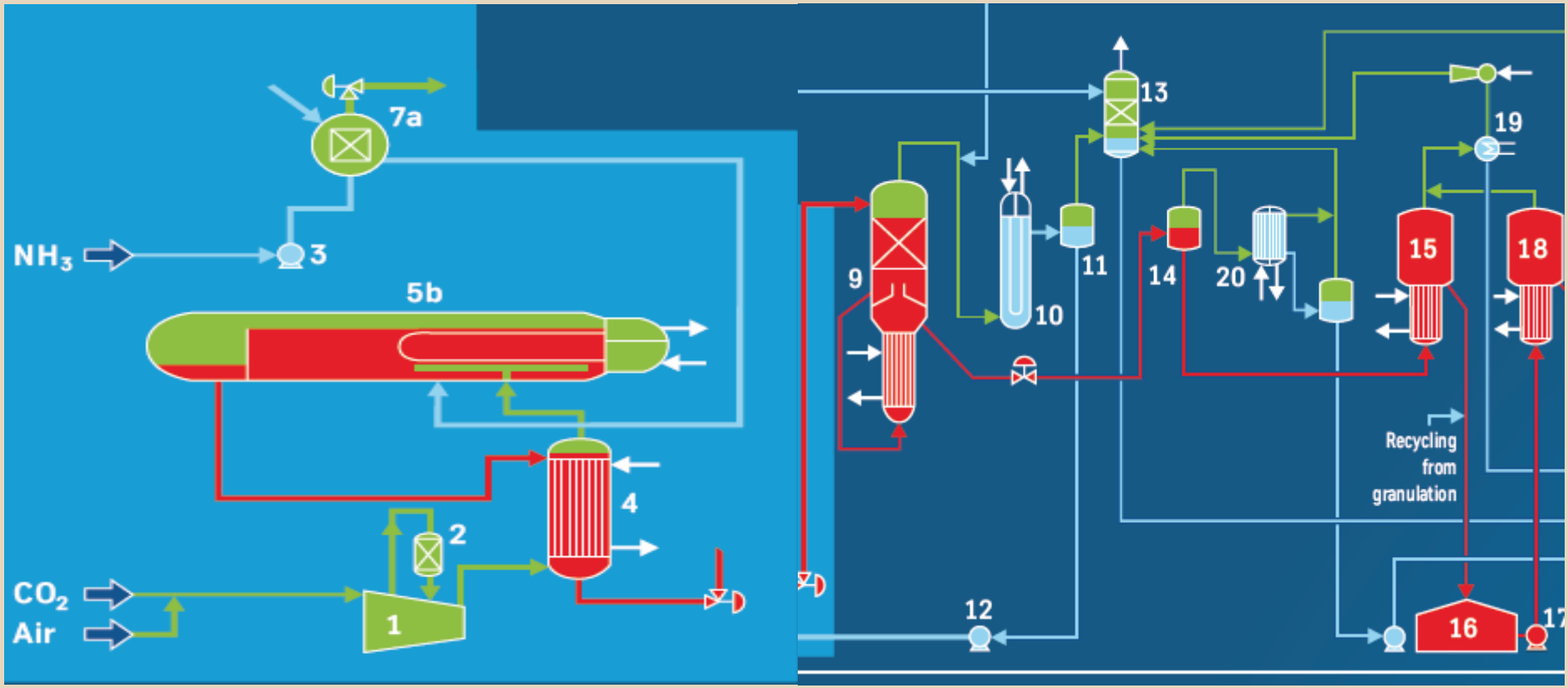

Operability

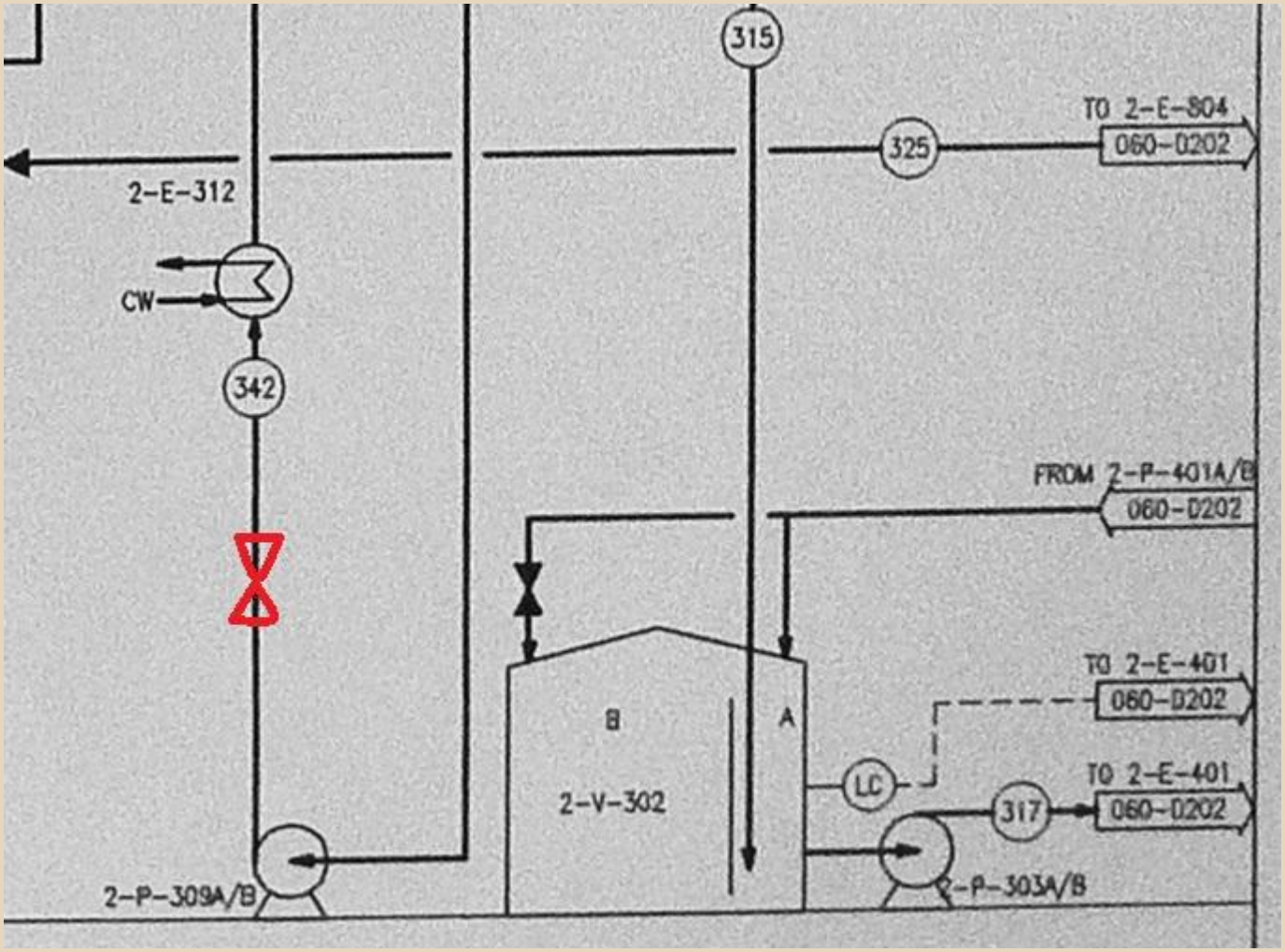

Operability

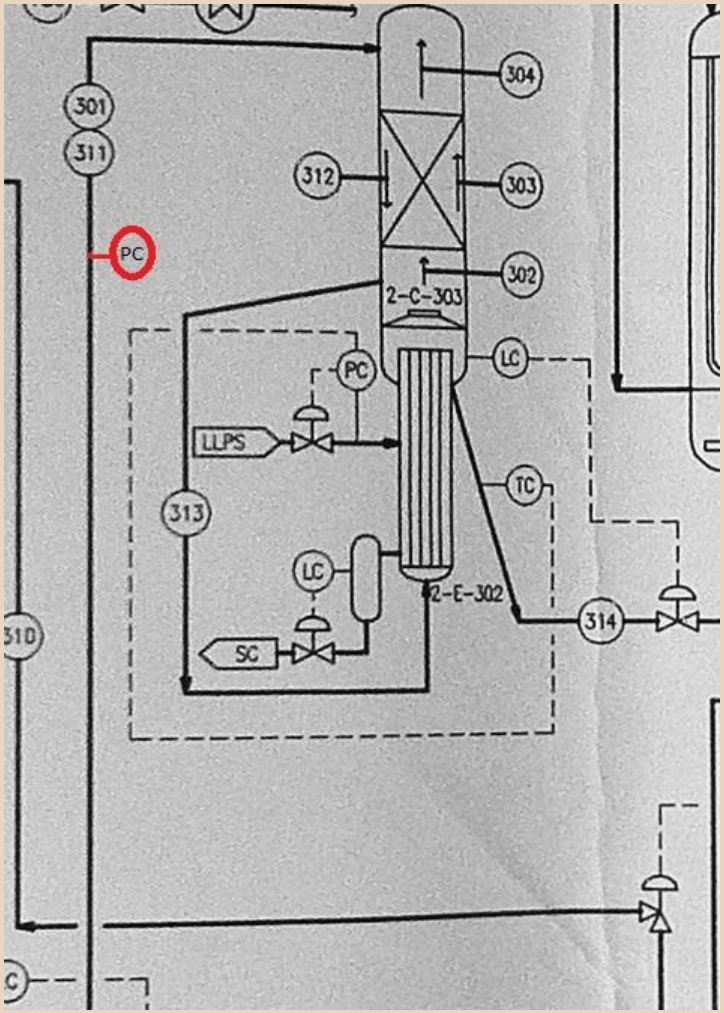

HAZOP

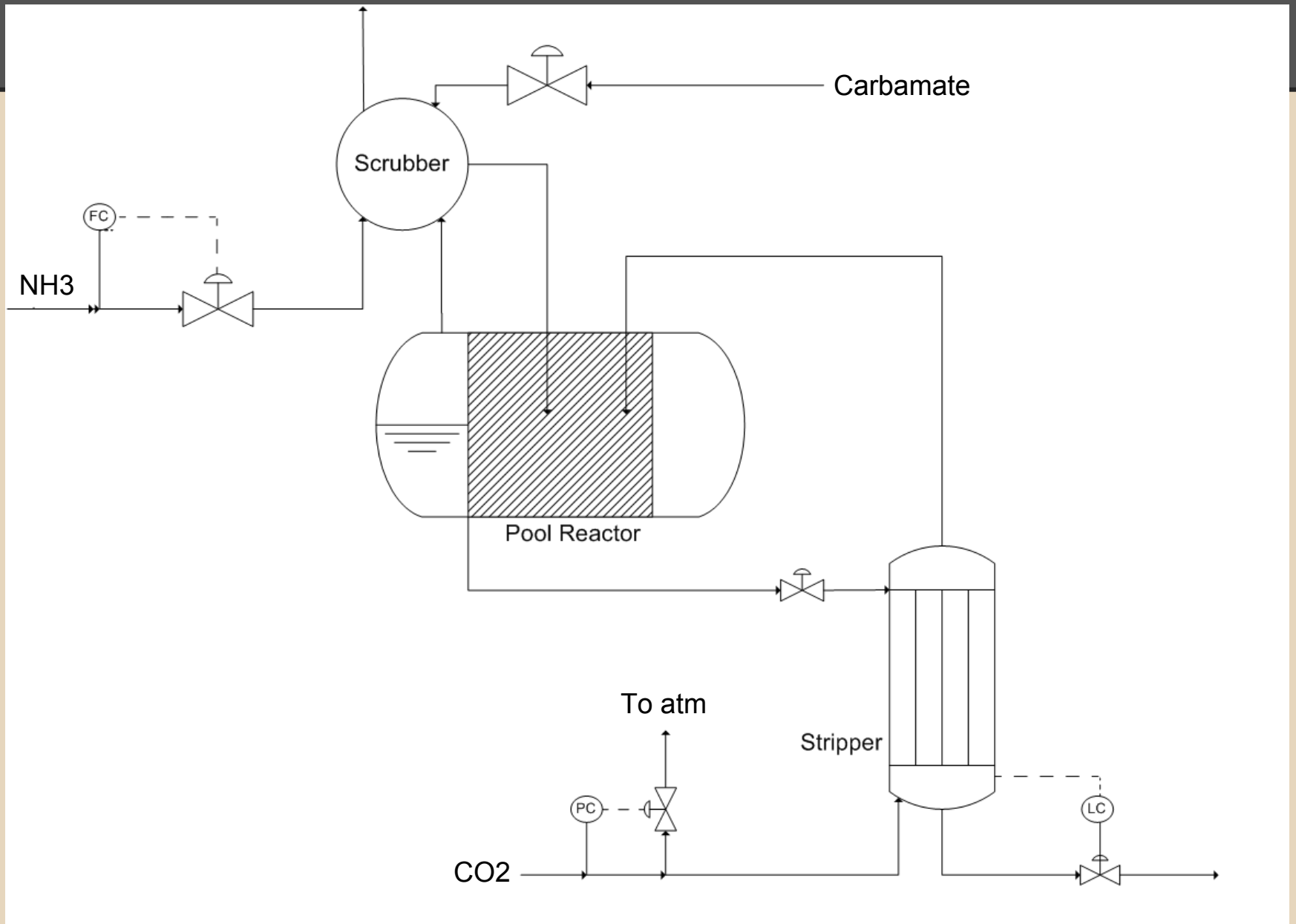
Carbamate
Scrubber
FC
NH3
Pool Reactor
To atm
Stripper
PC
LC
CO2

HAZOP

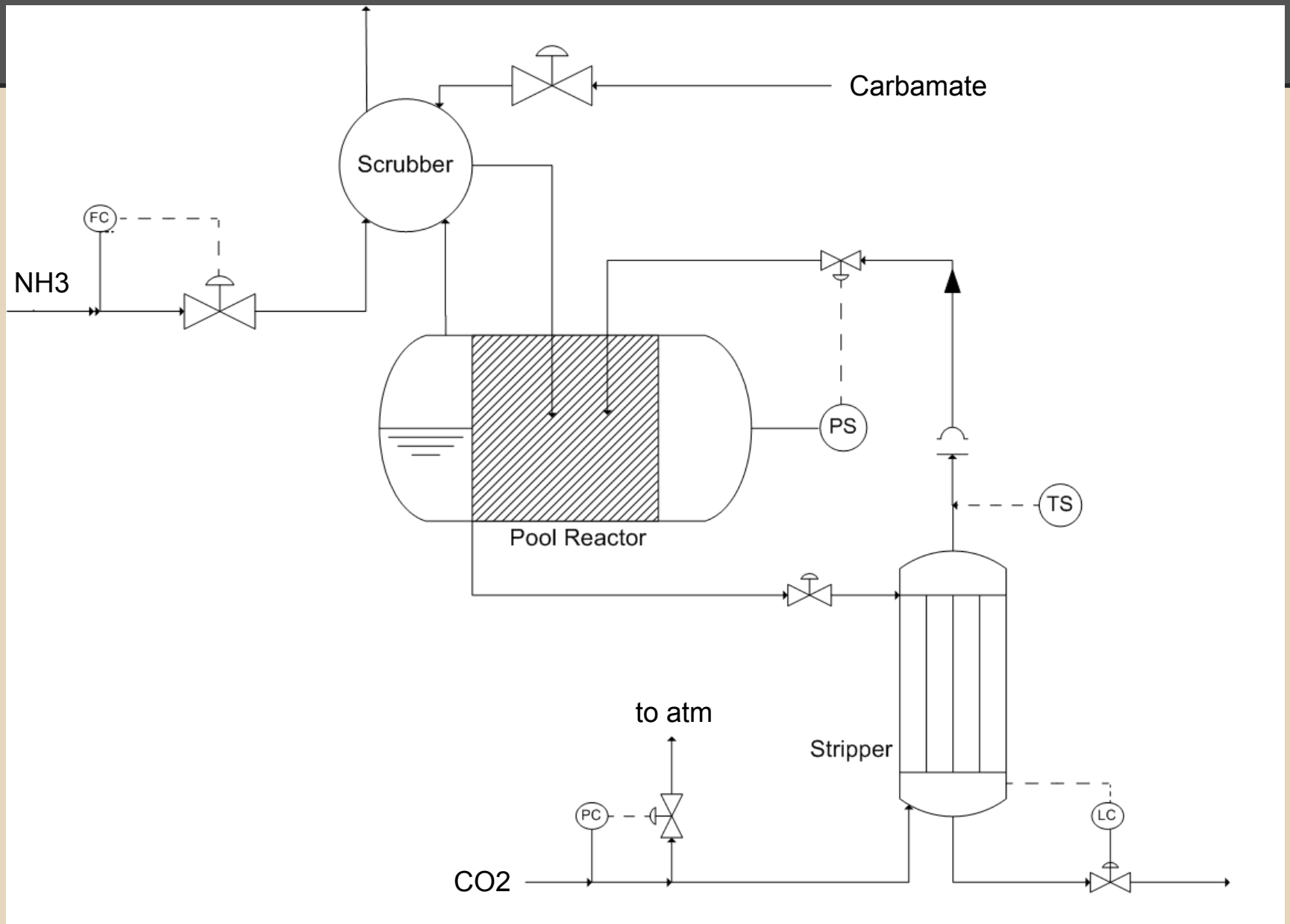
Carbamate
Scrubber
FC
NH3
PS
TS
Pool Reactor
to atm
Stripper
PC
LC
CO2

Questions???

Game time

JEOPARDY

Process Intro/Overview	Operability	HAZOP
CANDY	CANDY	CANDY
Chocolate	Chocolate	Chocolate
Gum	Gum	Gum

Disinfection in Drinking Water Treatment

Elaf Kasim, Shraddha Panchal, Sarah Najib

Agenda

1. Process Overview
2. Operating Window
3. Flexibility & Reliability
4. Start-up & Transition
5. Interactive Activity

Process Overview

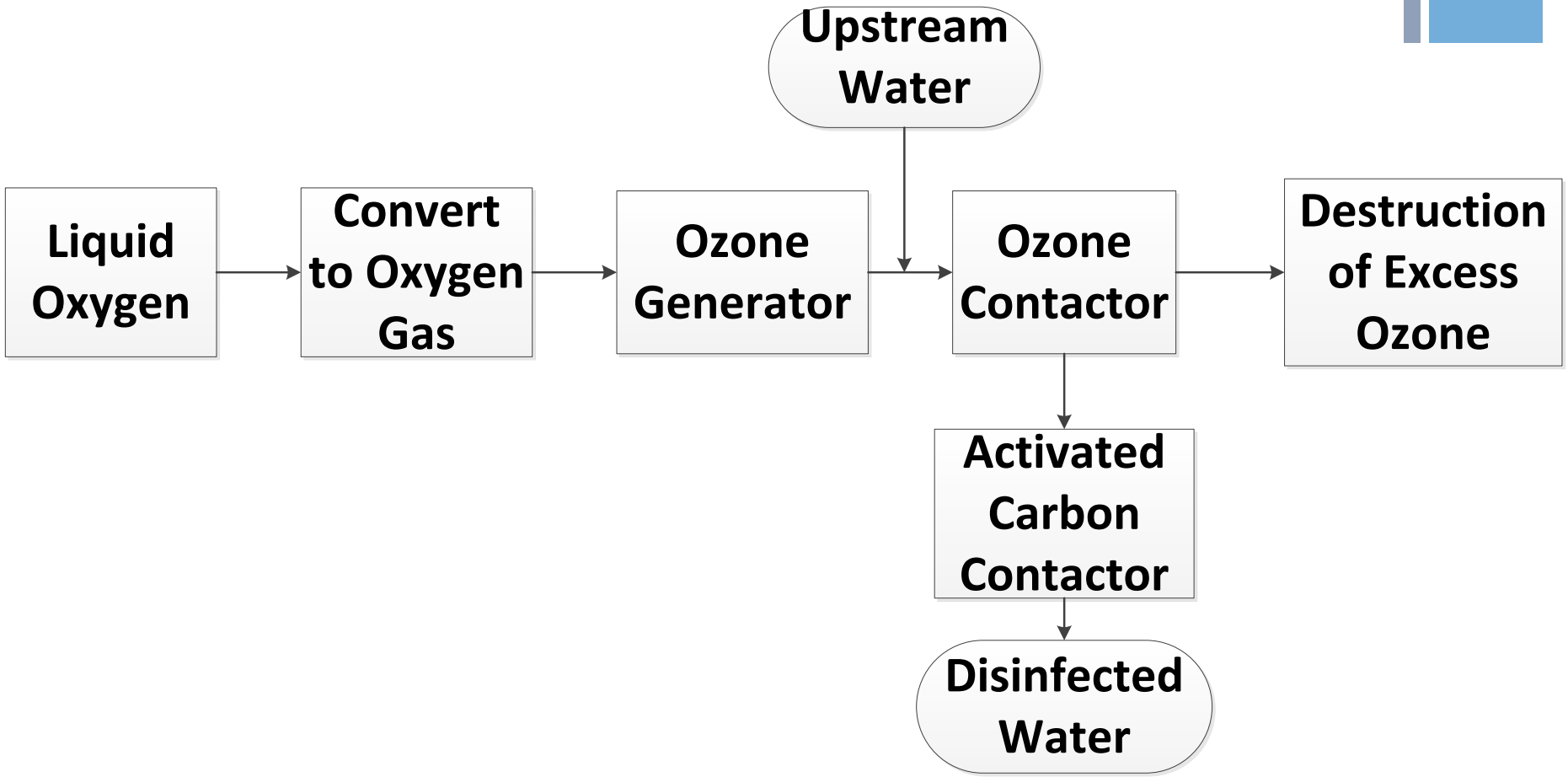

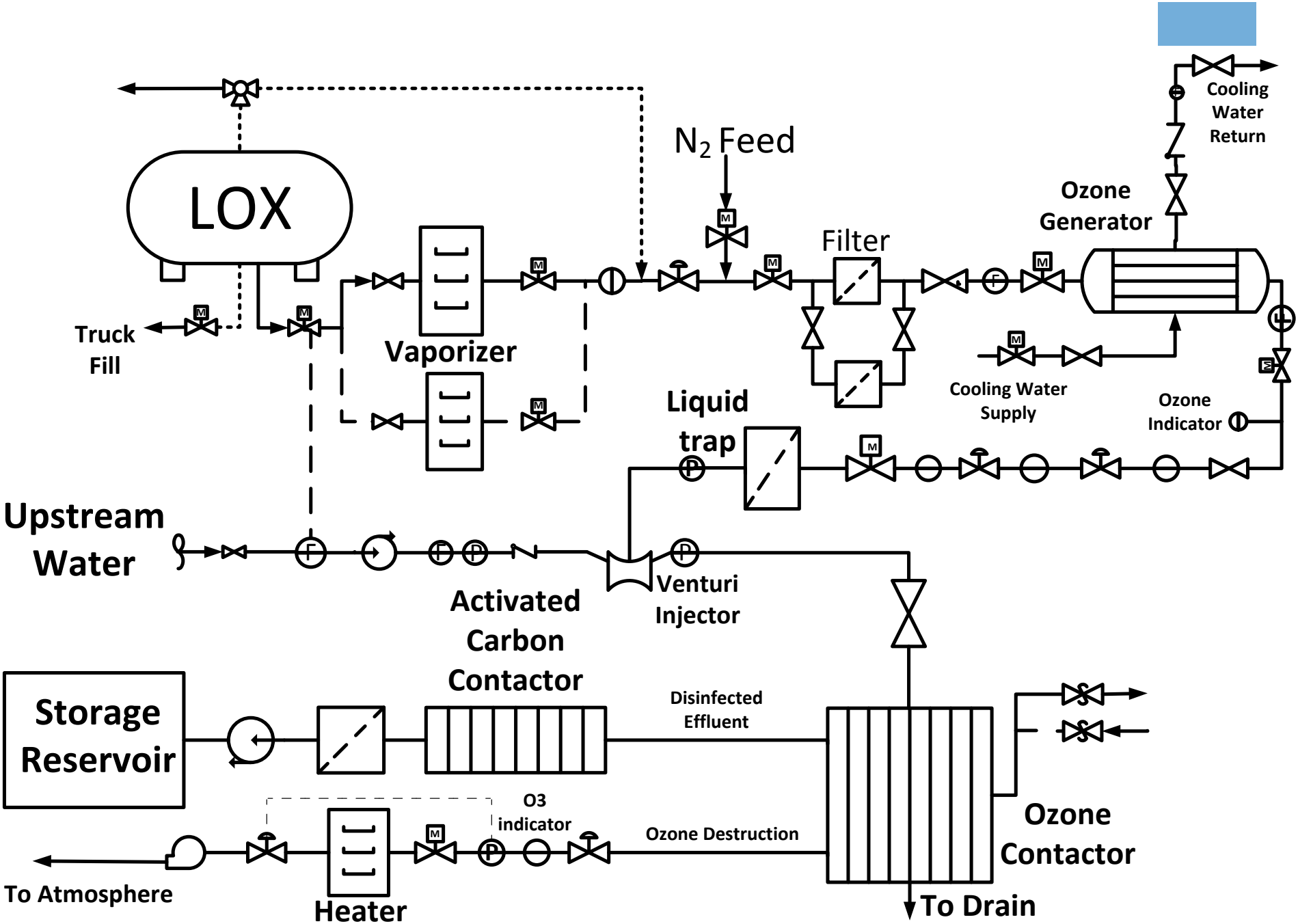
LOX
Truck Fill
Vaporizer
N_2 Feed
Filter
Ozone Generator
Cooling Water Return
Cooling Water Supply
Ozone Indicator
Liquid trap
Upstream Water
Venturi Injector
Activated Carbon Contactor
Storage Reservoir
Disinfected Effluent
O3 indicator
Ozone Destruction
Ozone Contactor
To Atmosphere
Heater
To Drain

Ozonation: Operating Window

- Generated on-site due to rapid decay of ozone
- Contact time: Min.- 10 minutes, Max.- 30 minutes
- The maximum allowable ozone concentration in the discharged off-gas is 0.1 ppm (by volume)

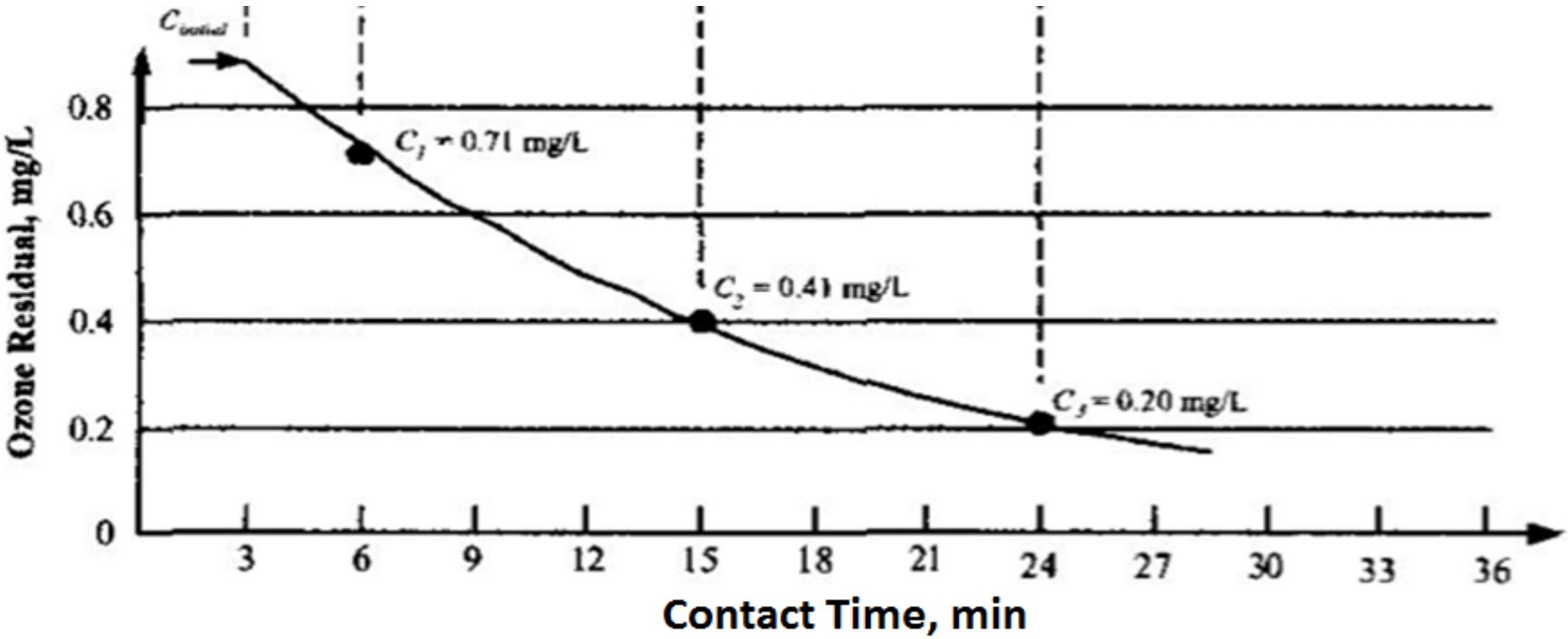

Reliability

- Back up units:
  - Vaporizers,
  - Ozone generators
  - filters

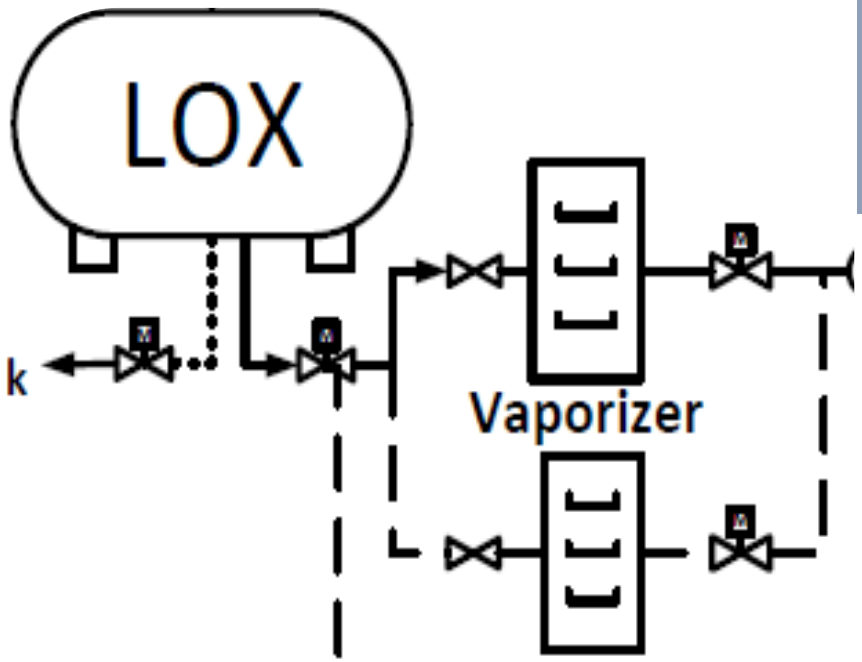

- Additional activated carbon storage -Change used carbon when carbon efficiency reduced
- Back up electricity generators in case of power outage

Flexibility

- Design ozone generator in excess capacity or add extra generators to accommodate changes
  - Disturbance: Season changes has effect on organisms, warmer months require more ozone for disinfection

Start up and Transition phases

- Dry air or oxygen should be allowed to flow through the generator to ensure that any moisture has been purged prior to energizing the electrodes- approx. 12 hours
  - Use for start up process
- As an alternative, a small flow of dry air can be passed through the generator continuously when it is in standby mode to maintain the dry condition
  - Use for spare generator units

Comparing Alternative Treatments

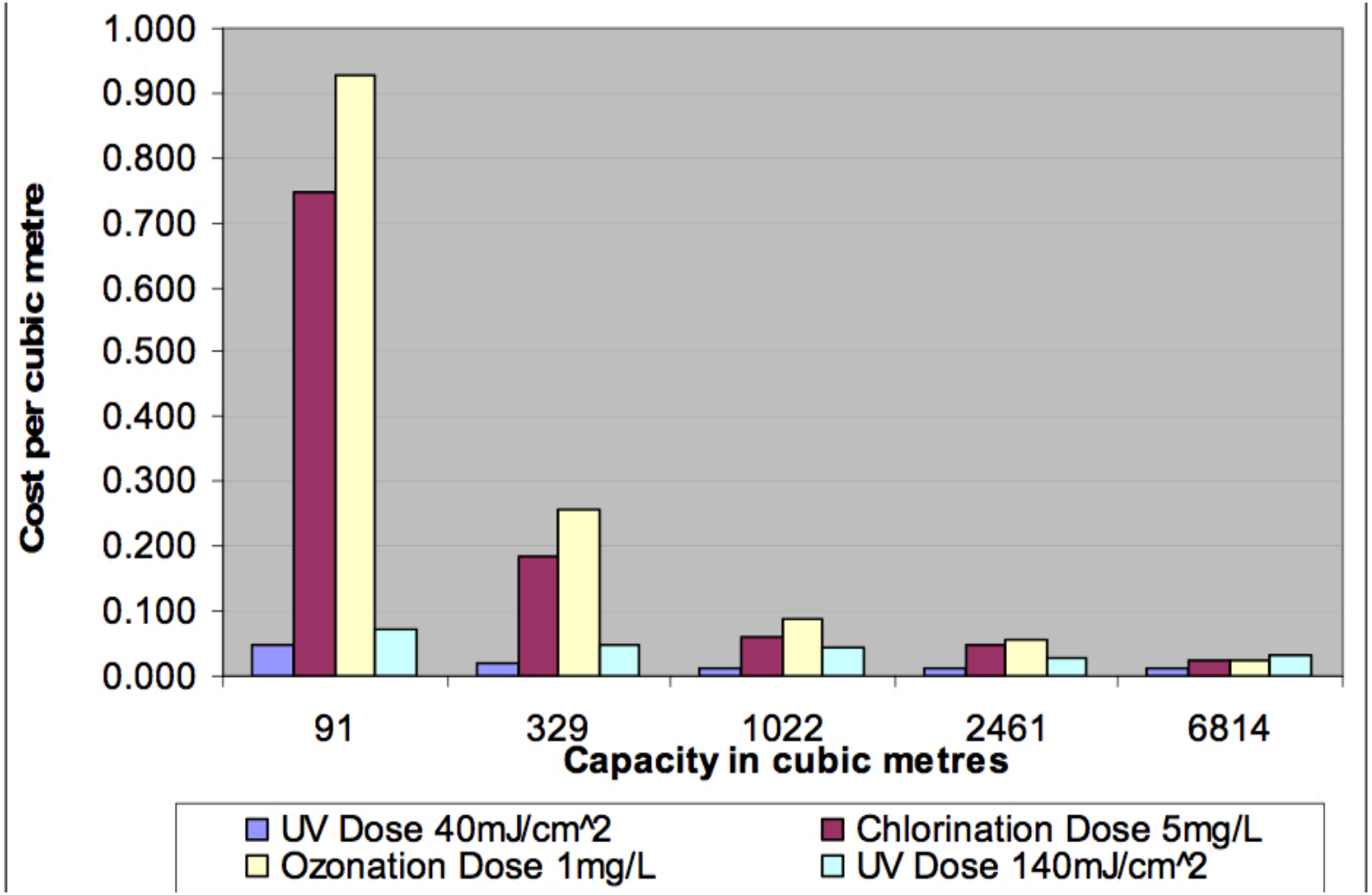
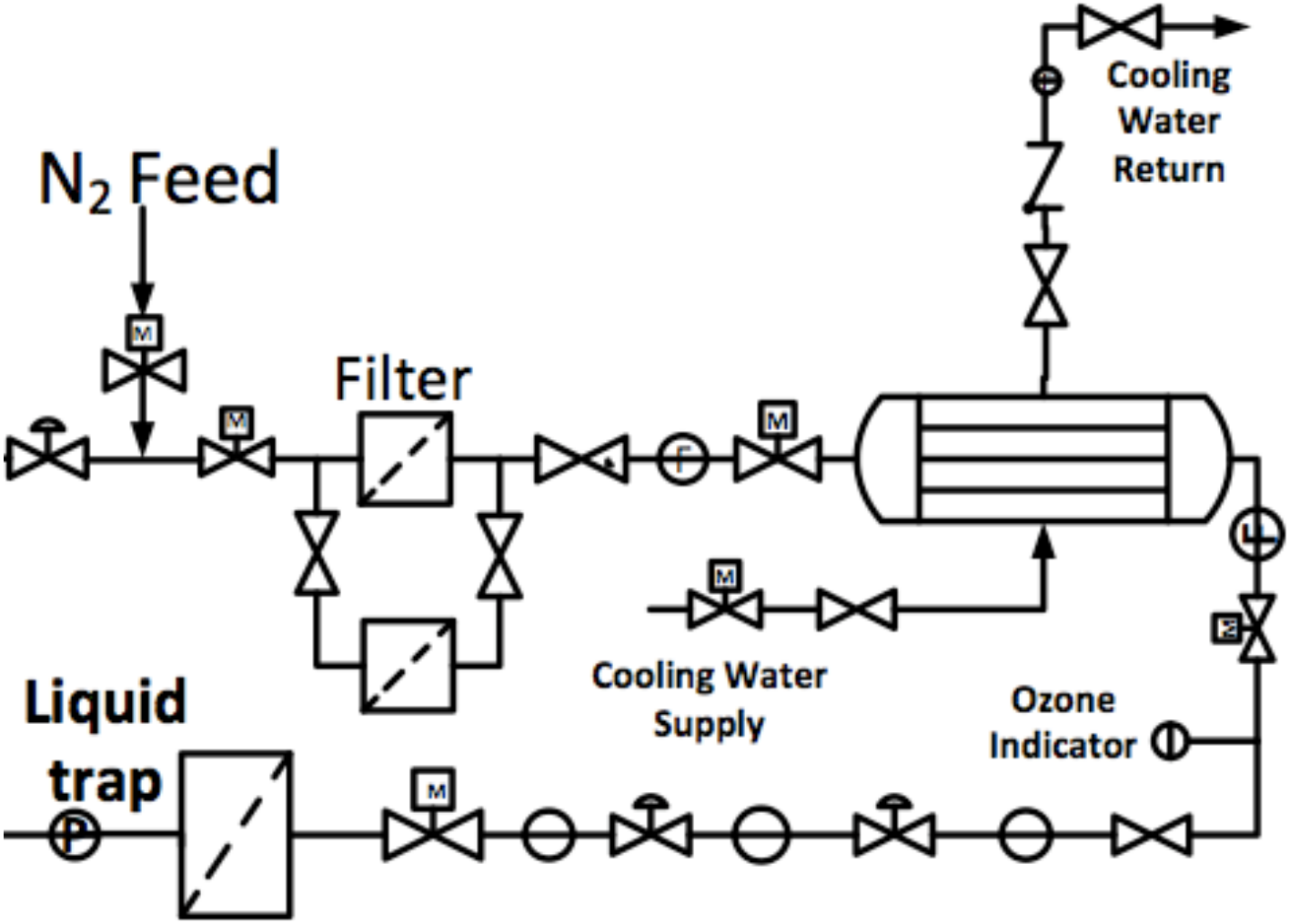
Class Activity