Engineering Economics and Problem Solving, 4N4, 2013

Tutorial/Assignment 6

Kevin Dunn, kevin.dunn@mcmaster.ca **Tutorial date: 21 October 2013; due date: 25 October 2013**

AIM: *To confirm your understanding of process drawings*

Engineers use process drawings to efficiently and clearly describe process designs. It is the basic document for any facility, and captures some of the most concentrated information. It is used for HAZOP studies (next topic in the course). It is the document that will be reviewed and approved by government authorities.

Here, we will gain experience in reading these diagrams by answering questions on the drawing PID-2A in Woods' *Process Design and Engineering Practice*. This drawing is more complicated than those we have seen in the past, but it is typical of drawings used in engineering practice.

1. General
   (a) What is the meaning of PFD?
   (b) What is the meaning of P&ID? (Note that this is not the PID algorithm in process control.)
   (c) Why do engineers give numbers to all equipment?
2. Overview of the process - *What's going in and coming out*?
   (a) Identify the main feed and product streams on the drawing.
   (b) Why are the distillation towers called "depropanizer" and "debutanizer"?
   (c) What utility streams are used, and in which units, in the process (e.g., water, steam, hydrogen, nitrogen, etc.)?
3. Piping and valves - *Keeping the materials in the plant and away from us!*
   (a) With what symbols are the pipes represented in the drawing?
   (b) What symbols are used for pumps? What general class of pumps is used in this process?
   (c) Why does the pipe size change from the inlet and outlet of `E-25`?
   (d) Find valve `FV-1`.
      - Is this an automated control valve or a "hand" valve?
      - Why are all of the other valves located around `FV-1`?
   (e) What is the size of the pipe between `F-26` and `FV-1`? - How is the "best" pipe size determined? - What is a rule of thumb for the velocity in a liquid-filled pipe?
   (f) What is `PSV-1`?
   (g) What type of valve body is used in `FV-4`? (Globe, ball, needle, etc.)
4. Pumps - *Getting to the heart of the matter*
   (a) Find pump `F-26`.
      - What is the equipment in the feed pipe to the pump?
      - What is the equipment at the outlet pipe from the pump?
      - What provides the power to the pump?
   (b) Pump `F-27` is located after `V-30`. Why does the drawing specify that `V-30` must be 4.5 m above ground level?

5. Sensors - *The eyes of the operators*
   (a) Where are the displays located?
      - To read `PI3`, where would you look?
      - To read `TI4`, where would you look?
      - To read `PT6`, where would you look?
      - Could you find historical data for `FC4`? For `TI-6`?
   (b) What is the meaning of the lines with cross-hatching?
   (c) What is the purpose of `PS7`?
      - Why are so many instruments linked to it?
      - What process variable does `dPI 1` display?
   (d) What type of flow sensor is used for `FC-4`?
   (e) What type of temperature sensor is used in `TC-12`?
   (f) What type of analyzer is used for `AI-1`?
6. Process equipment – the reason for the plant.
   (a) How many theoretical trays exist in the debutanizer?
   (b) Explain the principles of the condenser `E-28`, specifically how the pressure is controlled by changing the heat transfer duty.
   (c) Why is `TC12` controlling the temperature of a tray in the debutanizer? Describe the principle behind why this manipulated and controlled variable selection.
   (d) What type of reboiler is provided in the debutanizer? (kettle, thermosyphon, pumped circulation, etc.)
   (e) Find heat exchanger `E-24`.
      - Why is steam entering and water leaving?
      - What is the meaning of the box with "`T`" inside?
7. *To consider*: How will your group draw your process drawings?
8. Observe vessel V-29, the feed drum in the P&ID. Determine if anything is missing. If yes, sketch the drum and add the needed equipment.

9. An exothermic polymerization reaction occurs in the CSTR, creating a product with the consistency of syrup. The reactant and cold solvent flow to the reactor and the product is withdrawn from the bottom. Hot water flows to the reactor only during startup. After the reactor is warm enough for the reaction to begin, the hot water flow is stopped and the cooling water flow rate is adjusted to manipulate and control the reactor temperature. The control system is for the operation after startup.

   (a) Discuss the choice of all control loops in the diagram. Are the manipulated/controlled pairings sensible?

   (b) Name the alarms that you would, as the engineer responsible for the system, add to the control room operation's desk?

   (c) Companies are periodically audited by their insurance agents. These agents will want to see P&IDs of the as-built process. Describe what SIS 102 does to the insurance agent.

   (d) What relief would you add to the flowsheet: show the location and type of relief valve.

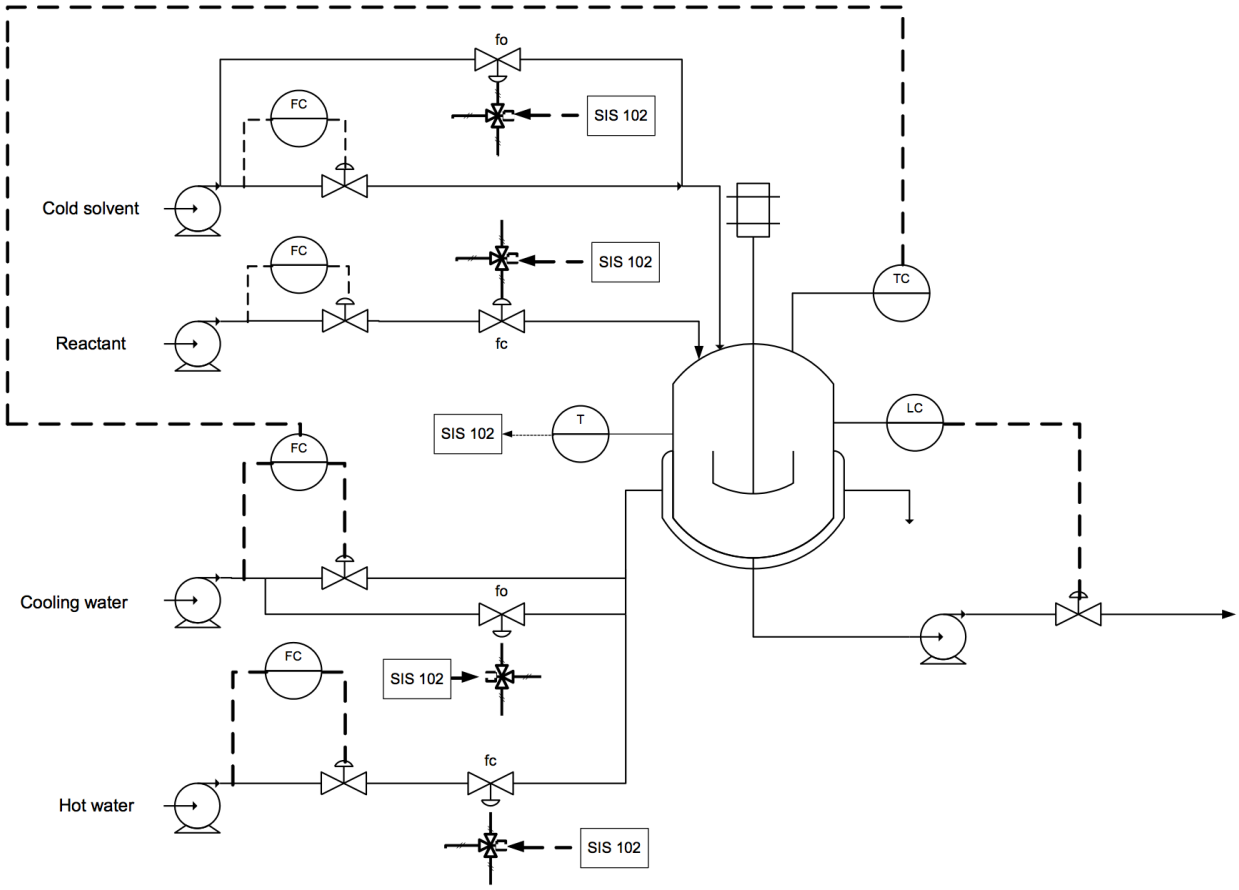

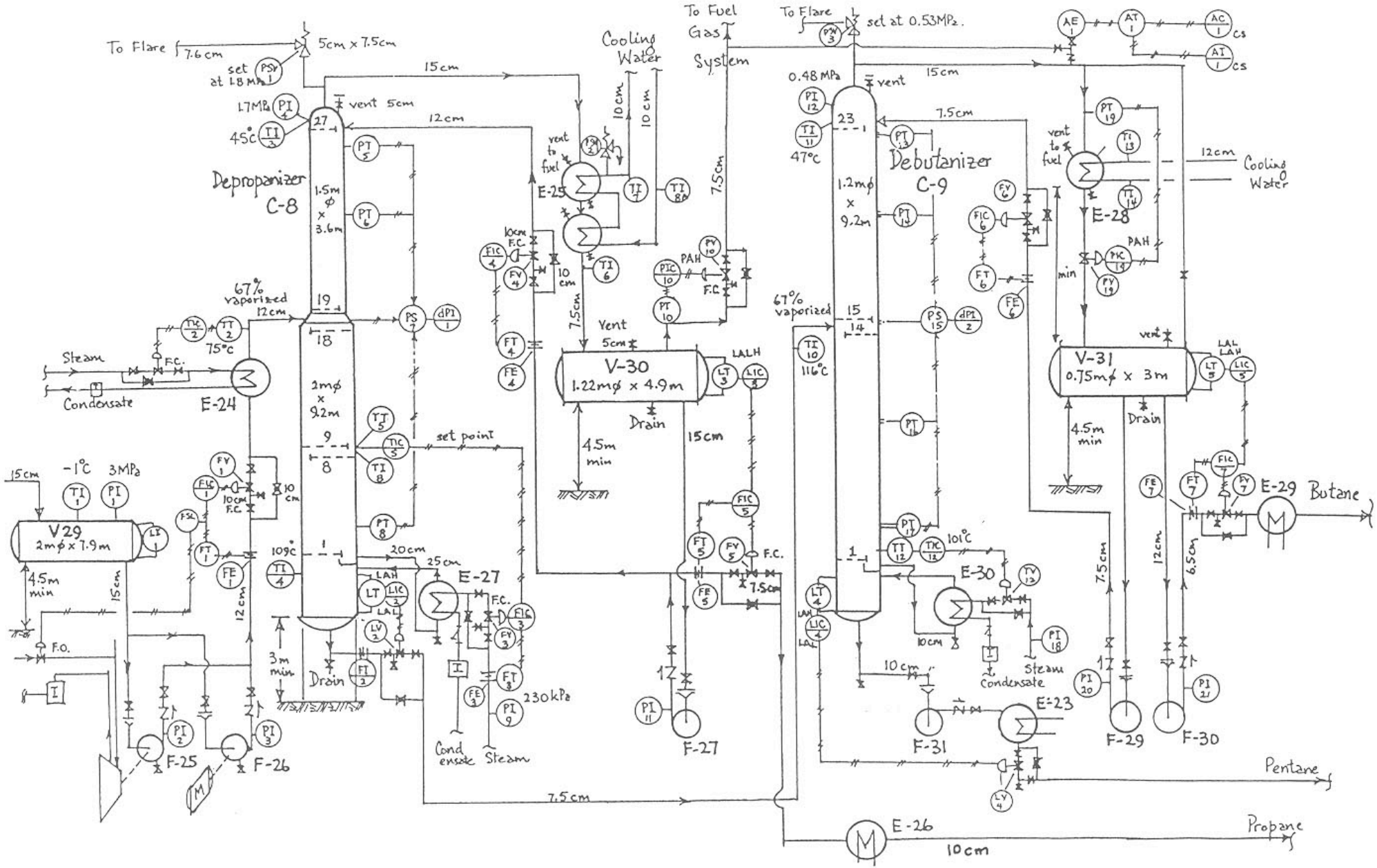

PID–2A Depropanizer/Debutanizer