Engineering Economics and Problem Solving, 4N4, 2014

Tutorial/Assignment 8

Tutorial date: 13, 14 November 2014; due date: **21 November 2014, 13:30** (please note the date and time)

AIM: *To get more in depth with the concept of Process Safety.*

Question 1 [0]

The tutorials on 20 and 21 November and the following week on 27 and 28 November are going to be different. These are timed tutorials that deal with process troubleshooting. They are performed in groups of 3; you will be working with other people in the class.

There is just the right amount of time to run the tutorial in the time we have available. All 3 people have to be present in the group for the tutorial to start.

These tutorials are graded, and if you are late, you will be letting two other people down as well.

Please be early at the tutorial.

Question 2

The textbook by Crowl and Louvar is a well-known book on Chemical Process Safety. Download the free first chapter from the publisher's website.

The chapter shows the FAR data for selected industries.

1. What is FAR?
2. What do you notice about the FAR values from 1986 to 1990?
3. What is the FAR for a voluntary activity, such as canoeing, or rock climbing?

Further in the chapter, on page 16 is a figure 1-7 that shows the causes of loss in the chemical industry.

4. What does "mechanical failure" mean?

Question 3

In the same electronic chapter, read the section on the Seveso Disaster. The disaster is notable for its vented release of TCDD into the atmosphere. The chapter says this occurred because the "*reactor went out of control, resulting in a higher than normal operating temperature and increased production of TCDD*". This is true, but incomplete.

1. Research and document the exact reasons why the "reactor went out of control", eventually releasing toxic TCDD into the atmosphere.
2. As a result of the Seveso Disaster, one of the 6 layers in the safety hierarchy has been impacted by regulations and directives. Which layer was impacted, and how?

Question 4

The following process flow diagram shows the P&ID of the flash process we have considered in class. The flash process separates methane and ethane in the overhead stream from the remaining hydrocarbons, propane, butane and pentane.

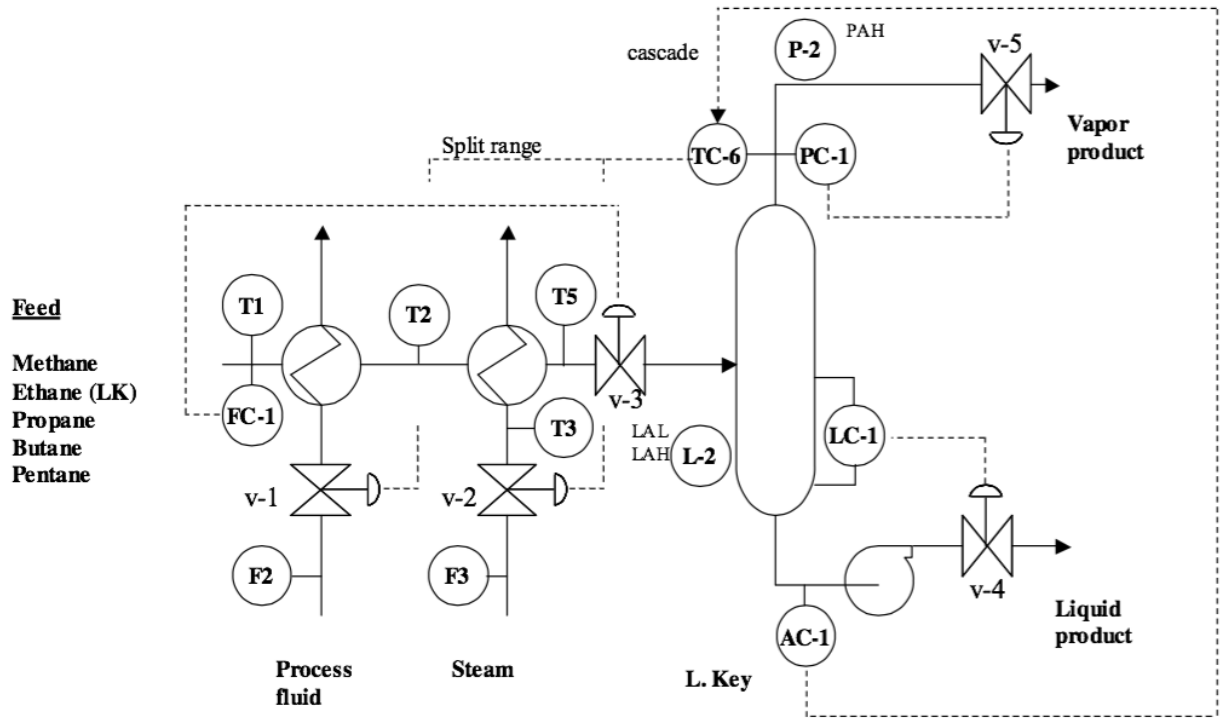

In your SDL report you must document the control loops. For example, loop `LC1` to `v4` can be justified on this basis: "The liquid level is an unstable variable, so it must be controlled, for safety purposes, by adjusting the exit valve position. The exit valve, when opened, will lower the liquid level." Notice that the justification has 3 parts:

- the reason for the control loop (see the class notes, slide 7, where there are 7 reasons for control loops)
- the manipulated variable(s)
- the controlled variable (with the requirement that there is a cause-effect relationship from the MVs to the CVs)

Now some questions:

1. Give a similar justification for the `PC1` to `v5` loop, making sure all 3 parts are present in your answer.
2. Give a similar justification for the loop that has `AC1` as the controlled variable, making sure all 3 parts are present in your answer.
3. Three alarms are indicated in the diagram. Explain the need for each of them.
4. The control valves are reliable mechanical devices that open and close based on an air-pressure signal. If the air-pressure fails the valves must either fail in an open position, or a closed position (read ahead in the class slides 13 and 14).

   You, the engineer, are responsible for selecting whether every control valve should fail open or fail closed. There are 5 control valves shown; for each one select whether it should *fail open* or *fail closed*, explaining the reason for your choice.

   In the SDL project you will have to do the same, indicating with an `fo` *or* `fc` *symbol on the P&ID, as well a brief explanation for some of them in your report.*

Question 5

Here is a simple process and instrumentation diagram:

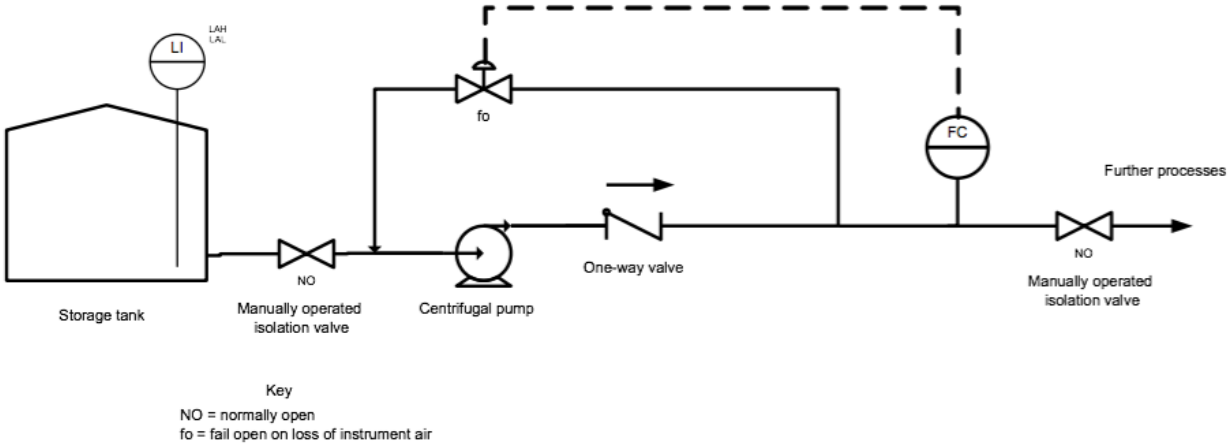

1. Describe in simple language (for example, to your electrical engineering colleague), what is happening in this process.
2. What is the purpose of the centrifugal pump?
3. What is the purpose of the NO valves?
4. What is the purpose of the one-way valve?
5. What is the purpose of the flow controller?
6. Here is a revised drawing of the same process, showing several improvements. Compare it to the prior version, and explain the reasons for all changes.

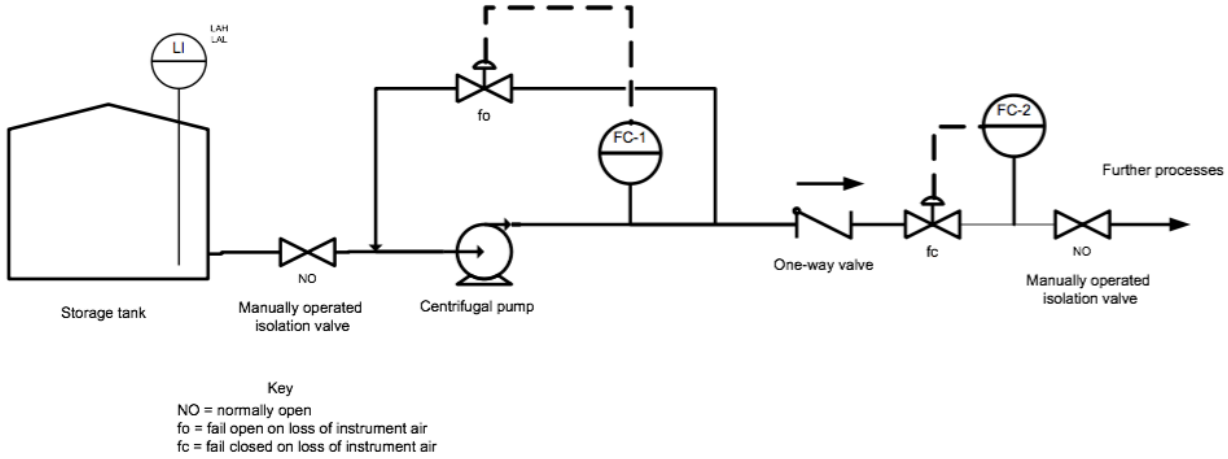

Question 6

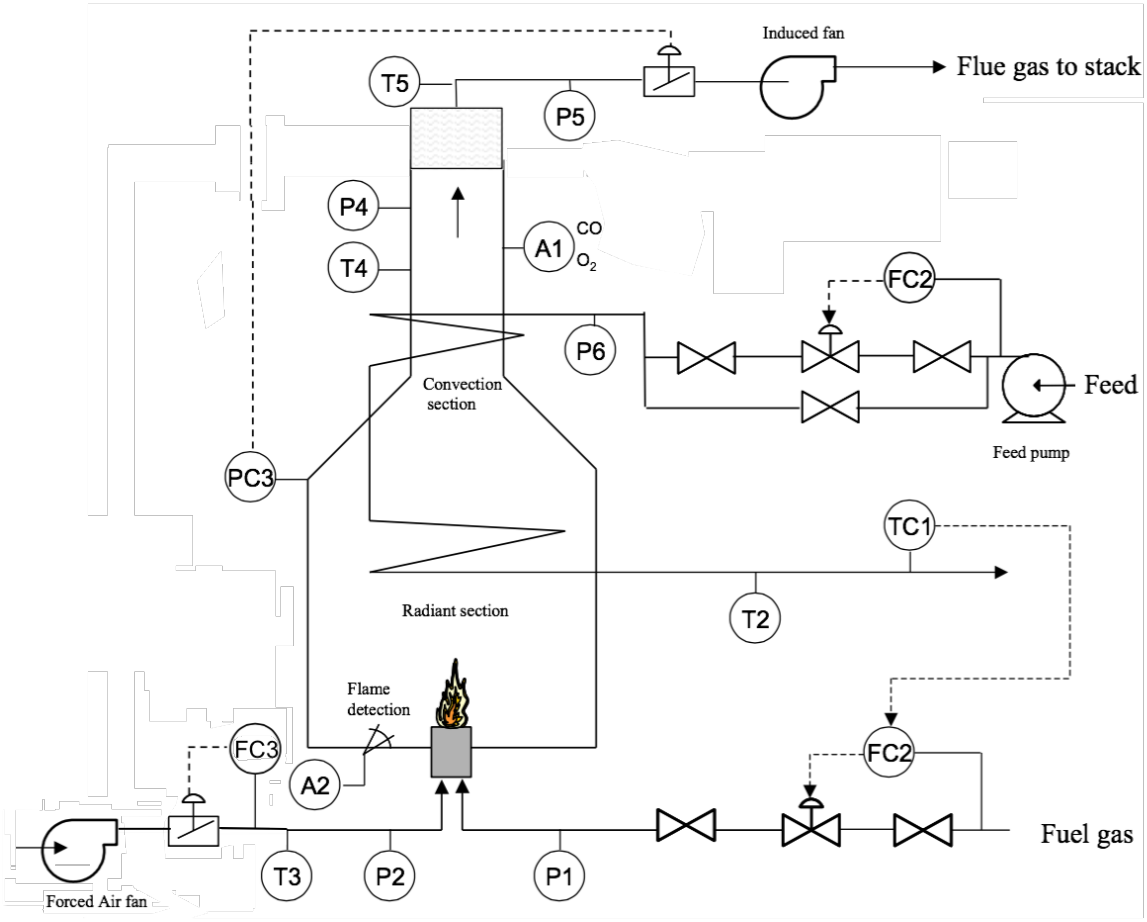

An example of a fired heater is shown here, which raises the feed stream, which is mixture of various hydrocarbons, from 100 to 250 degrees Celsius. We will do a simplified HAZOP on this unit. The HAZOP procedure looks at a node, for example the pipe leaving the feed pump, till before the convection section.

Next, we look for a deviation from regular operation. Let's consider the case of "no flow".

1. List several causes of "no flow" in this piece of pipe.
2. What would be the consequences of "no flow"?
3. Which changes would you recommend be added to improve the design?

Now some other questions related to the diagram:

4. What is an "induced fan" and then go on to explain the reason for the control loop that uses `PC3`.

Question 7 [20]

You will do another peer-evaluation (electronic survey) for your group this coming week. This survey is based on the work done for this assignment.

Please complete the survey at https://maceng.wufoo.eu/forms/che-4n04-peer-evaluation-form/ before 21 November at 13:30. Surveys submitted after this date will be disregarded.

END