Chemical Engineering: 4N4
Engineering Economics and Problem Solving
McMaster University

Duration of exam: 3 hours | **Instructor: Kevin Dunn**
17 December 2012 | **kevin.dunn@mcmaster.ca**

This exam paper has 6 pages and 5 questions. You are responsible for ensuring that your copy of the paper is complete. Bring any discrepancy to the attention of the invigilator.

Note:

- You may bring in any printed materials to the exam; any textbooks, any papers, *etc*.
- You may use **any calculator** during the exam.
- You may answer the questions in any order on any pages of the answer booklet.
- *Time saving tip*: please use bullet points to answer, where appropriate, and **never repeat the question** back in your answer.
- If any part of the question seems ambiguous, please make a clear and reasonable assumption, and continue your answer.
- WHERE APPROPRIATE, PART OF YOUR ANSWERS MAY BE SKETCHED ON THE EXAM QUESTION PAPER, which will also **conveniently save you time**. Please note this in your answer booklet.
- Total marks: 100 marks; 102 marks available.
- Total time: 3 hours.

Question 1 [37 = 3 + 2 + 3 + 2 + 3 + 2 + 7 + 3 + 3 + 6 + 3]

Provide single word, or short sentence/bullet point answers to the following. Please show brief calculations where required.

1. Both DB and DC retirement packages are funded by amounts that you and your employer contribute while you work for them. List a key characteristic of a DB retirement package that is different to a DC package. Then list the opposite, i.e. a characteristic difference between a DC and DB package. **[3]**

2. The government has just announced (26 November 2012) an increase of $500 to the maximum TFSA amount you may contribute in the 2013 personal tax year.

   - What does TFSA stand for? **[1]**

   - What is the maximum value you can contribute in this tax year (2012)? **[1]**

3. Your smug colleague from Laval has forgotten what depreciation is and why it is an important consideration when evaluating engineering projects with large capital expenditure. Kindly write him a paragraph where you explain the concept concisely and why it is important in an NPV calculation. **[3]**

4. Explain why HAZOPs should ideally be done in teams and name a non-engineering person that should be part of the team. **[2]**

5. From the BP Texas City case study studied in class, name 2 contributing factors that led to the raffinate tower liquid overflowing through the top of the tower. **[3]**

6. We learned about several other major safety studies in class that involved our industry. Name any two sites that we have learned from, and will hopefully never repeat those same mistakes. (Do not describe what happened at the site in your answer, simply name the site) **[2]**

7. Flow in a pipe can be measured using an orifice plate, based on the Bernoulli principle that the pressure drop over the plate can be related to the flow.

   - Describe 2 other methods and the principle exploited by commercial flow meters on piping? **[4]**
   - We learned 2 important rules of thumb about where an orifice plate should be placed. Explain the guidance briefly and why it makes sense. **[3]**

8. Our company bought and installed a heat-exchanger in 2004 at a cost of $488,800 to heat a process stream. We want to purchase another one, carrying the same streams, but with half the duty: this is for a 50% expansion of our production throughput.

   - What is an estimated cost in 2011 for such a heat exchanger. (If you don't have the necessary data with you in the exam, please make the most accurate estimate possible.) **[2]**
   - With respect to the process stream being heated, do we place the new exchanger in series or in parallel with the existing exchanger? **[1]**

9. A petroleum refinery built on the eastern seaboard of the USA in 1980 had a capital cost of U$ 24 million. What would be an estimated cost of a refinery, but with double the capacity, built in 2005 in the Texas gulf coast area? **[3]**

10. The flowsheet below contains two safety relief valves.

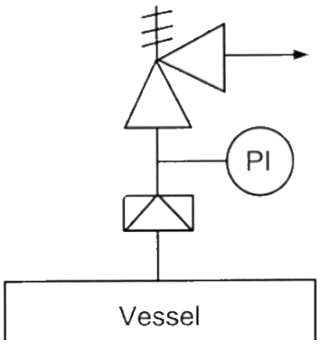

   - What is the advantage of them being in series? Be sure to clearly identify each valve in your answer. **[3]**
   - Explain whether the pressure indicator is an unnecessary capital expense. **[1]**
   - What is the general principle used to size safety relief valves? **[2]**

11. We saw an example in the tutorials where we measure differential pressure across the trays of a distillation column. New columns often have temperature and pressure sensors, almost on every tray in the column. Assuming the pressure sensors are working correctly, what might you infer, as the process engineer, if the pressure drop across a section of the column: **[3]**

   - was much higher than before?
   - was much lower than before?

Question 2 [14 = 8 + 2 + 1 + 1 + 2]

You have recently come across the topic of reliability, so this is an SDL question. The formula for overall reliability of a set of connected units, R, is given by:

- $R = R_1 \times R_2$ for only 2 units in series
- $R = 1 - (1 - R_1)(1 - R_2)$ for 2 units in parallel

where R_1 and R_2 are the individual reliabilities, and R is the overall reliability of the system. The formulas extend in a logical way when there are more than 2 units involved.

From maintenance records at your site you find reliability of hand valves = 0.99; reliability of a valve used in a control loop = 0.90; reliability of a heat exchanger before it starts leaking = 0.95; unit H-1501 is a composite unit, that has an estimated reliability of 0.9999; all other reactors and vessels have a reliability of 0.999.

Being curious, you decide to try out a reliability calculation on the flowsheet in figure below.

1. Using this newly acquired knowledge, calculate the overall reliability of the flowsheet, showing enough calculations in your answer booklet and/or this exam paper, to ensure that it is clear what you are doing. Please note these values are not representative of typical reliability values. **[8]**
2. Define the acronyms `hps` and `bfw` that are used in the flow sheet. **[2]**
3. Is the stream leaving H-1501 hotter or colder than the stream entering V-1501? **[1]**
4. Should the orifice flow meters be placed to the left (as currently shown) or to the right of the heat exchangers? *Left* or *Right*. **[1]**
5. Explain why the feed stream is split into 3 sub-streams. **[2]**

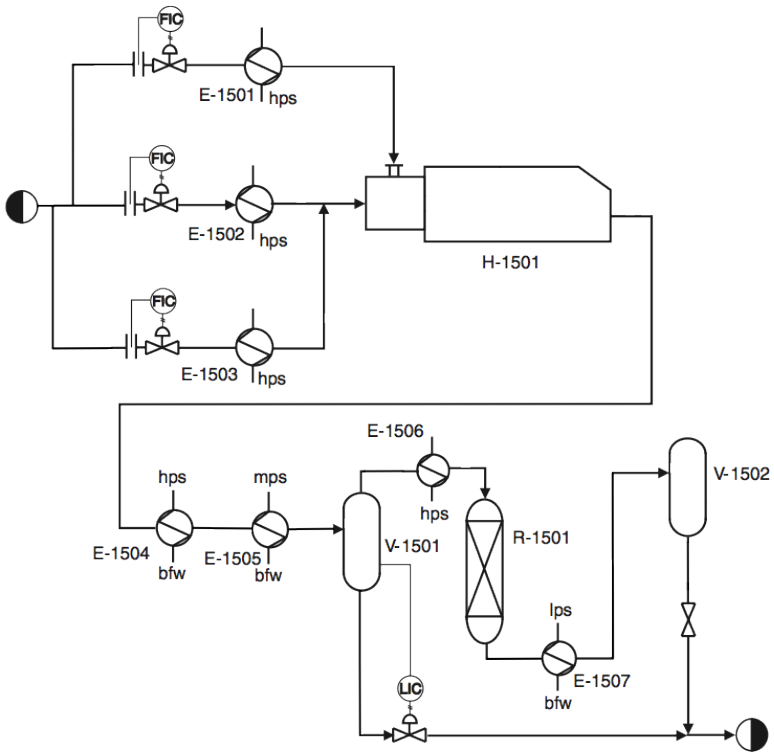

Question 3 [20 = 14 + 4 + 2]

Your company is investigating the use of an automated machine to inspect the final product quality of their bio-derived drug for treating diabetes. The machine has a capital cost of $1.2 million. It is available from the vendor in Japan, in a fairly short time frame, at most a couple of months. Costs of shipping from the FOB point in Osaka would be $35,000. Building modifications and the total costs of installation are estimated at $30,000. Assume operating costs of the equipment to be minor. A trip for you and the product manager to Osaka to pre-inspect the machine will cost $15,000, for business-class flights, hotel, and meals.

The alternative option is to use manual labour inspection. These workers cost the company an hourly wage of $25/hour, and can be called on-site at short notice. A well-trained labourer can inspect 700 items per hour, and the product manager estimates that she needs 16 labourers to inspect the items and complete production on time: so 16 labourers, each working 8 hours per shift, at 200 shifts per year are required.

There is also a risk of false negatives from the manual inspection, so the company actually pays the workers $15/hour and sets the other $10/hour aside as a refund contingency, to accumulate enough cash to deal with, and refund customer complaints. This contingency is considered a regular business expense. The automated machine has an extremely low false negative rate, so no cash reserve is required for this option.

Using the above information, and all the other relevant information we have learned in this course, prepare two NPV scenarios for your manager by hand: call them *manual* vs *machine*. Your *machine* scenario should assume the machine is bought, purchased, installed and used immediately in period 0. All scenarios should run for 3 complete years (i.e. end at the end of period 2). **[14]**

Using only the numeric tables you created, then write bullet points that you would type up later in an email to your manager, explaining which choice is a better option and why. **[4]**

Also explain to your manager which 2 variables you plan to investigate in a sensitivity analysis the moment you get back to your computer. **[2]**

This is based on an actual case study from prior work experience; but the numbers have been significantly adjusted. Please write all calculations in $ 1,000's of dollars, i.e. $1.2 million should be presented as $1,200.

Question 4 [22]

The process shown in the figure below consists of a fired heater, which raises the temperature of a hydrocarbon stream via convective and radiative heat transfer, and a packed bed chemical reactor. The process has been working well for over one year. Recently, the market demand for the product has been decreasing, and in response the plant is reducing production rate. This week the operating orders specify another 5% decrease in production rate, to 80% of the design rate.

While sipping your first cup of coffee in your office, you receive a message from the plant production supervisor. When the operators reduced the plant feed rate by the 5% specified, the flows and temperatures began to oscillate wildly. The operators immediately returned to the original feed rate, and the oscillations stopped.

We are producing more than we are selling, and as a result, the product tank is filling up fast. You better solve the problem!

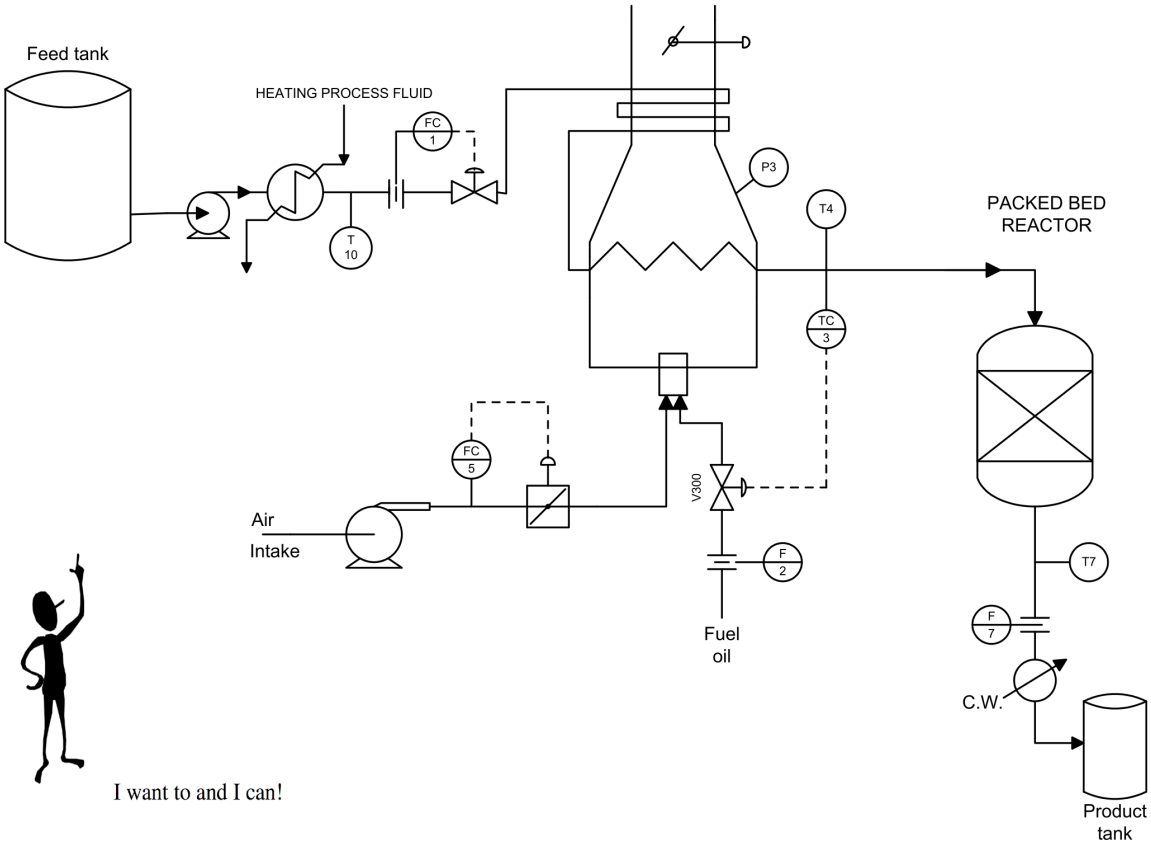

You are not expected to completely solve this problem during the examination. Your answer must address the following issues. No other parts of the troubleshooting procedure are required for this examination.

1. Give at least four hypotheses for the cause of the trouble.
2. Give at least four actions that would be useful in eliminating incorrect hypotheses and reducing to one correct hypothesis. (You will not be able to determine the correct hypothesis in this problem, because you cannot obtain the feedback from your proposed actions.) Your actions should be clearly stated and numbered in the order you would request them in the plant.
3. If you believe you have enough information, suggest a short-term and a longer-term corrective action.

Question 5 [9]

You have been asked to review the preliminary design in the figure below by using the HAZOP procedure. The plant is a packed bed reactor with feed/effluent preheat. The feed is a mixture of hydrocarbons and hydrogen. The chemical reaction is exothermic.

Quickly review the process and concentrate on important issues that will improve the safety of the process. Select ONE node, and perform a HAZOP on ONE important parameter/guide word. Identify the node on the figure. Report your results in your answer booklet using the standard HAZOP format.

Your grade will be influenced by the choice of node and parameter, as well as the causes, consequences and actions that you provide. High grades will be assigned for an important node/parameter choice that addresses likely, significant safety/operability issues and provides actions that improve the design.

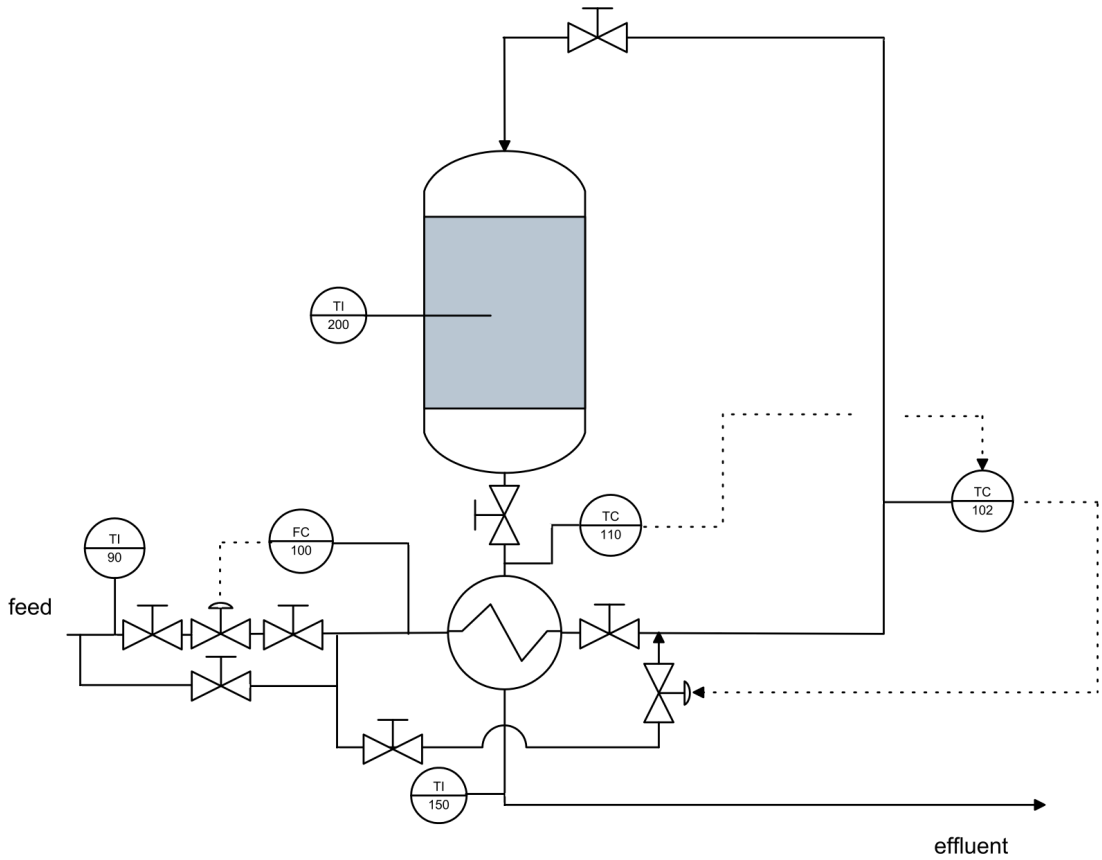

The end.